2015 Charger

OWNER'S MANUAL

VEHICLES SOLD IN CANADA

With respect to any Vehicles Sold in Canada, the name Chrysler Group LLC shall be deemed to be deleted and the name Chrysler Canada Inc. used in substitution therefore.

DRIVING AND ALCOHOL

Drunken driving is one of the most frequent causes of accidents.

Your driving ability can be seriously impaired with blood alcohol levels far below the legal minimum. If you are drinking, don't drive. Ride with a designated non-drinking driver, call a cab, a friend, or use public transportation.

WARNING!
Driving after drinking can lead to an accident. Your perceptions are less sharp, your reflexes are slower, and your judgment is impaired when you have been drinking. Never drink and then drive.

This manual illustrates and describes the operation of features and equipment that are either standard or optional on this vehicle. This manual may also include a description of features and equipment that are no longer available or were not ordered on this vehicle. Please disregard any features and equipment described in this manual that are not on this vehicle.

Chrysler Group LLC reserves the right to make changes in design and specifications, and/or make additions to or improvements to its products without imposing any obligation upon itself to install them on products previously manufactured.

Copyright © 2014 Chrysler Group LLC

TABLE OF CONTENTS

SECTION		PAGE
1	INTRODUCTION	3
2	THINGS TO KNOW BEFORE STARTING YOUR VEHICLE	9
3	UNDERSTANDING THE FEATURES OF YOUR VEHICLE	103
4	UNDERSTANDING YOUR INSTRUMENT PANEL	257
5	STARTING AND OPERATING	389
6	WHAT TO DO IN EMERGENCIES	493
7	MAINTAINING YOUR VEHICLE	531
8	MAINTENANCE SCHEDULES	595
9	IF YOU NEED CONSUMER ASSISTANCE	603
10	INDEX	613

INTRODUCTION

CONTENTS

- INTRODUCTION 4
- HOW TO USE THIS MANUAL 4
- WARNINGS AND CAUTIONS 6
- VEHICLE IDENTIFICATION NUMBER 6
- VEHICLE MODIFICATIONS/ALTERATIONS 7

INTRODUCTION

Congratulations on selecting your new Chrysler Group LLC vehicle. Be assured that it represents precision workmanship, distinctive styling, and high quality - all essentials that are traditional to our vehicles.

This Owner's Manual has been prepared with the assistance of service and engineering specialists to acquaint you with the operation and maintenance of your vehicle. It is supplemented by Warranty Information, and various customer-oriented documents. Please take the time to read these publications carefully. Following the instructions and recommendations in this manual will help assure safe and enjoyable operation of your vehicle.

NOTE: After reviewing the owner information, it should be stored in the vehicle for convenient referencing and remain with the vehicle when sold.

When it comes to service, remember that your authorized dealer knows your vehicle best, has factory-trained technicians and genuine parts, and cares about your satisfaction.

HOW TO USE THIS MANUAL

Consult the Table of Contents to determine which section contains the information you desire.

Since the specification of your vehicle depends on the items of equipment ordered, certain descriptions and illustrations may differ from your vehicle's equipment.

The detailed index at the back of this Owner's Manual contains a complete listing of all subjects.

Consult the following table for a description of the symbols that may be used on your vehicle or throughout this Owner's Manual:

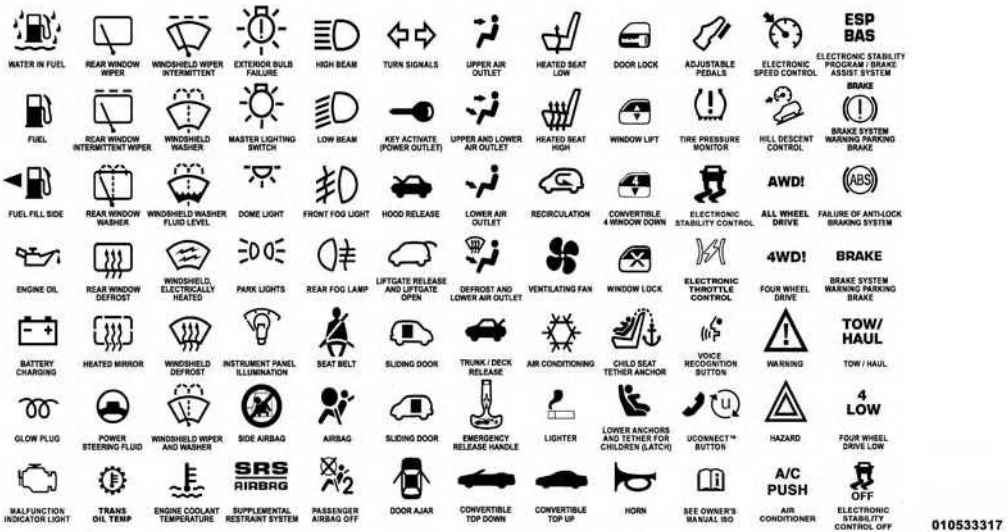
WATER IN FUEL
REAR WINDOW WIPER
WINDSHIELD WIPER INTERMITTENT
EXTERIOR BULB FAILURE
HIGH BEAM
TURN SIGNALS
UPPER AIR OUTLET
HEATED SEAT LOW
DOOR LOCK
ADJUSTABLE PEDALS
ELECTRONIC SPEED CONTROL
ESP BAS
ELECTRONIC STABILITY PROGRAM / BRAKE ASSIST SYSTEM
FUEL
REAR WINDOW INTERMITTENT WIPER
WINDSHIELD WASHER
MASTER LIGHTING SWITCH
LOW BEAM
KEY ACTIVATE (POWER OUTLET)
UPPER AND LOWER AIR OUTLET
HEATED SEAT HIGH
WINDOW LIFT
TIRE PRESSURE MONITOR
HILL DESCENT CONTROL
BRAKE
BRAKE SYSTEM WARNING PARKING BRAKE
FUEL FILL SIDE
REAR WINDOW WASHER
WINDSHIELD WASHER FLUID LEVEL
DOME LIGHT
FRONT FOG LIGHT
HOOD RELEASE
LOWER AIR OUTLET
RECIRCULATION
CONVERTIBLE 4 WINDOW DOWN
ELECTRONIC STABILITY CONTROL
AWD!
ALL WHEEL DRIVE
(ABS)
FAILURE OF ANTI-LOCK BRAKING SYSTEM
ENGINE OIL
REAR WINDOW DEFROST
WINDSHIELD, ELECTRICALLY HEATED
PARK LIGHTS
REAR FOG LAMP
LIFTGATE RELEASE AND LIFTGATE OPEN
DEFROST AND LOWER AIR OUTLET
VENTILATING FAN
WINDOW LOCK
ELECTRONIC THROTTLE CONTROL
4WD!
FOUR WHEEL DRIVE
BRAKE
BRAKE SYSTEM WARNING PARKING BRAKE
BATTERY CHARGING
HEATED MIRROR
WINDSHIELD DEFROST
INSTRUMENT PANEL ILLUMINATION
SEAT BELT
SLIDING DOOR
TRUNK / DECK RELEASE
AIR CONDITIONING
CHILD SEAT TETHER ANCHOR
VOICE RECOGNITION BUTTON
WARNING
TOW/ HAUL
TOW / HAUL
GLOW PLUG
POWER STEERING FLUID
WINDSHIELD WIPER AND WASHER
SIDE AIRBAG
AIRBAG
SLIDING DOOR
EMERGENCY RELEASE HANDLE
LIGHTER
LOWER ANCHORS AND TETHER FOR CHILDREN (LATCH)
UCONNECT™ BUTTON
HAZARD
4 LOW
FOUR WHEEL DRIVE LOW
MALFUNCTION INDICATOR LIGHT
TRANS OIL TEMP
ENGINE COOLANT TEMPERATURE
SRS AIRBAG
SUPPLEMENTAL RESTRAINT SYSTEM
PASSENGER AIRBAG OFF
DOOR AJAR
CONVERTIBLE TOP DOWN
CONVERTIBLE TOP UP
HORN
SEE OWNER'S MANUAL ISO
A/C PUSH
AIR CONDITIONER
OFF
ELECTRONIC STABILITY CONTROL OFF
010533317

WARNINGS AND CAUTIONS

This Owners Manual contains **WARNINGS** against operating procedures that could result in a collision or bodily injury. It also contains **CAUTIONS** against procedures that could result in damage to your vehicle. If you do not read this entire Owner's Manual, you may miss important information. Observe all Warnings and Cautions.

VEHICLE IDENTIFICATION NUMBER

The Vehicle Identification Number (VIN) is on the left front corner of the instrument panel. The VIN is visible from outside of the vehicle through the windshield. This number also appears on the Automobile Information Disclosure Label affixed to a window on your vehicle, the vehicle registration, and the title.

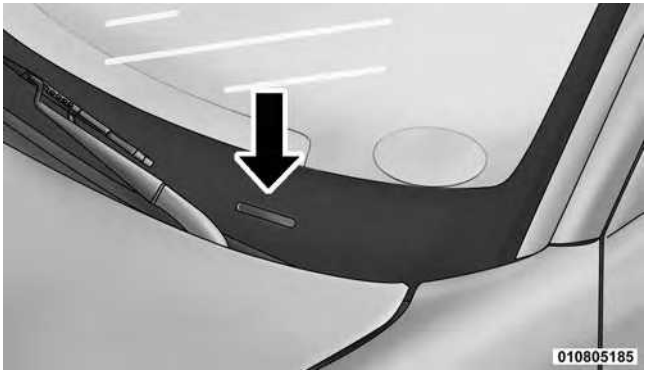

VIN Location

The vehicle identification number (VIN) is also located on the right front strut tower inside the engine compartment.

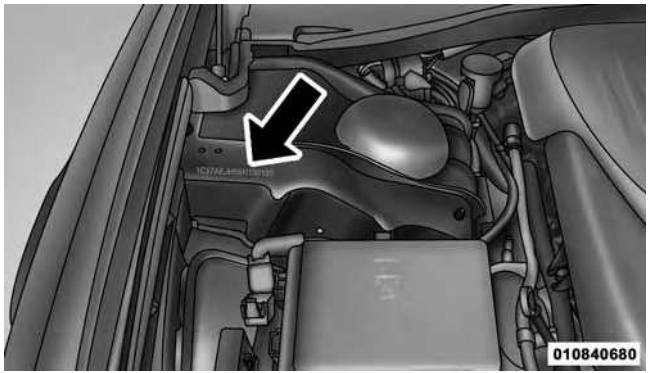

VIN Location

NOTE: It is illegal to remove or alter the VIN.

VEHICLE MODIFICATIONS/ALTERATIONS

WARNING!

Any modifications or alterations to this vehicle could seriously affect its roadworthiness and safety and may lead to a collision resulting in serious injury or death.

THINGS TO KNOW BEFORE STARTING YOUR VEHICLE

CONTENTS

■ A WORD ABOUT YOUR KEYS 12
- □ Keyless Ignition Node (KIN) 12
- □ Key Fob 13
- □ Ignition Or Accessory On Message 15

■ SENTRY KEY® 16
- □ Replacement Keys 17
- □ Customer Key Programming 18
- □ General Information 18

■ VEHICLE SECURITY ALARM — IF EQUIPPED . . .18
- □ Rearming Of The System 19
- □ To Arm The System 19
- □ To Disarm The System. 19
- □ Security System Manual Override. 20

■ ILLUMINATED ENTRY — IF EQUIPPED 20

■ REMOTE KEYLESS ENTRY (RKE) 21
- □ To Unlock The Doors 22
- □ To Lock The Doors 22
- □ To Unlatch The Trunk 23
- □ Using The Panic Alarm 23
- □ Programming Additional Transmitters 24

- Transmitter Battery Replacement 24
- General Information 25

■ REMOTE STARTING SYSTEM — IF EQUIPPED . .26
- How To Use Remote Start 26

■ DOOR LOCKS 29
- Manual Door Locks. 29
- Power Door Locks 31
- Child-Protection Door Lock System — Rear Doors 32

■ KEYLESS ENTER-N-GO™ 34

■ WINDOWS 39
- Power Windows 39
- Wind Buffeting 43

■ TRUNK LOCK AND RELEASE 43

■ TRUNK SAFETY WARNING. 44
- Trunk Emergency Release 45

■ OCCUPANT RESTRAINT SYSTEMS 46
- Important Safety Precautions 46
- Seat Belt Systems 47
- Supplemental Restraint System (SRS) 59
- Child Restraints 75
- Transporting Pets 96

■ ENGINE BREAK-IN RECOMMENDATIONS 96

■ SAFETY TIPS 97
- Transporting Passengers. 97
- Exhaust Gas 98

□ Safety Checks You Should Make Inside The Vehicle 99
□ Periodic Safety Checks You Should Make Outside The Vehicle 102

A WORD ABOUT YOUR KEYS

Your vehicle uses a keyless ignition system. This system consists of a Key Fob with Remote Keyless Entry (RKE) transmitter and a Keyless Ignition Node (KIN).

Keyless Enter-N-Go™ Feature

This vehicle is equipped with the Keyless Enter-N-Go™ feature. Refer to "Keyless Enter-N-Go™" in "Things To Know Before Starting Your Vehicle" for further information.

Keyless Ignition Node (KIN)

This feature allows the driver to operate the ignition with the push of a button as long as the Remote Keyless Entry (RKE) transmitter is in the passenger compartment.

The Keyless Ignition Node (KIN System) has four operating positions, three of which are labeled and will illuminate when in position. The three positions are: OFF, ACC, and ON/RUN. The fourth position is START. During start, ON/RUN will illuminate.

NOTE: In case the ignition does not change with the push of a button, the RKE transmitter (Key Fob) may have a low or dead battery. In this situation, a back up method can be used to operate the ignition switch. Put the nose side (side opposite of the emergency key) of the Key Fob against the Engine START/STOP button and push to operate the ignition.

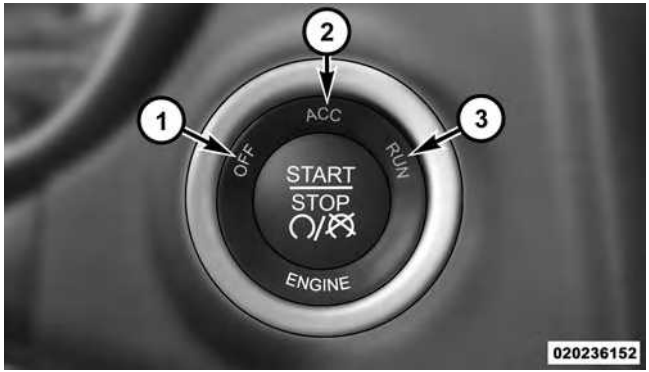

Keyless Ignition Node (KIN System)

1 — OFF
2 — ACC (ACCESSORY)
3 — ON/RUN

Key Fob

The Key Fob also contains the Remote Keyless Entry (RKE) transmitter and an emergency key, which stores in the rear of the Key Fob.

The emergency key allows for entry into the vehicle should the battery in the vehicle or the Key Fob go dead. The emergency key is also for locking/unlocking the glove compartment. You can keep the emergency key with you when valet parking.

To remove the emergency key, slide the mechanical latch on the back of the Key Fob sideways with your thumb and then pull the key out with your other hand.

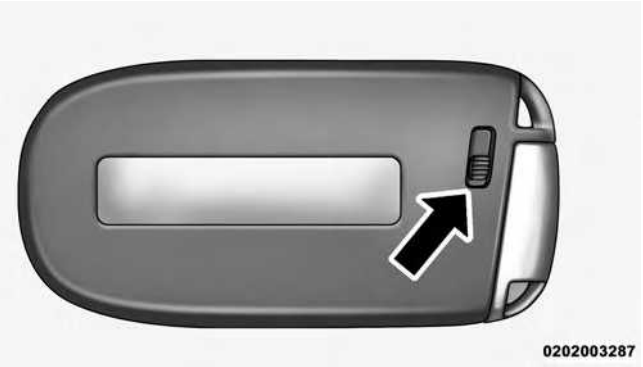

Mechanical Latch On The Back Of The Key Fob

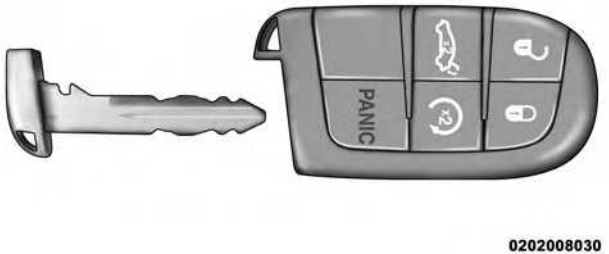

Emergency Key Removal

NOTE: You can insert the double-sided emergency key into the lock cylinders with either side up.

Ignition Or Accessory On Message

Opening the driver's door when the ignition is in ACC or ON (engine not running), a chime will sound to remind you to cycle the ignition to OFF. In addition to the chime, the ignition or accessory on message will display in the cluster.

NOTE: With the Uconnect® system, the power window switches, radio, power sunroof (if equipped), and power outlets will remain active for up to 10 minutes after the ignition is placed in the OFF position. Opening either front door will cancel this feature. The time for this feature is programmable. Refer to "Uconnect® Settings" in "Understanding Your Instrument Panel" for further information.

WARNING!

- **When leaving the vehicle, always remove the Key Fob from the vehicle and lock your vehicle.**
- **Never leave children alone in a vehicle, or with access to an unlocked vehicle.**
- **Allowing children to be in a vehicle unattended is dangerous for a number of reasons. A child or others could be seriously or fatally injured. Children should be warned not to touch the parking brake, brake pedal or the gear selector.**
- **Do not leave the Key Fob in or near the vehicle, or in a location accessible to children, and do not leave the ignition of a vehicle equipped with Keyless Enter-N-Go™ in the ACC or ON/RUN mode. A child could operate power windows, other controls, or move the vehicle.**

(Continued)

WARNING! ***(Continued)***

- **Do not leave children or animals inside parked vehicles in hot weather. Interior heat build-up may cause serious injury or death.**

CAUTION!

An unlocked car is an invitation to thieves. Always remove the Key Fob from vehicle, place the ignition in the OFF and lock all doors when leaving the vehicle unattended.

SENTRY KEY®

The Sentry Key® Immobilizer system prevents unauthorized vehicle operation by disabling the engine. The system does not need to be armed or activated. Operation is automatic, regardless of whether the vehicle is locked or unlocked.

The system uses a Key Fob with a factory-mated Remote Keyless Entry (RKE) transmitter, a Keyless Ignition Node (KIN) and a RF receiver to prevent unauthorized vehicle operation. Therefore, only Key Fobs that are programmed to the vehicle can be used to start and operate the vehicle. The system will not allow the engine to crank if an invalid Key Fob is used to start and operate the vehicle. The system will shut the engine off in two seconds if an invalid Key Fob is used to start the engine.

After placing the ignition to the ON/RUN position, the Vehicle Security Light will turn on for three seconds for a bulb check. If the light remains on after the bulb check, it indicates that there is a problem with the electronics. In addition, if the light begins to flash after the bulb check, it indicates that someone used an invalid Key Fob to start the engine. Either of these conditions will result in the engine being shut off after two seconds.

If the Vehicle Security Light turns on during normal vehicle operation (vehicle running for longer than 10 seconds), it indicates that there is a fault in the electronics. Should this occur, have the vehicle serviced as soon as possible by an authorized dealer.

CAUTION!

The Sentry Key® Immobilizer system is not compatible with some aftermarket remote starting systems. Use of these systems may result in vehicle starting problems and loss of security protection.

All of the Key Fobs provided with your new vehicle have been programmed to the vehicle electronics.

Replacement Keys

NOTE: Only Key Fobs that are programmed to the vehicle electronics can be used to start and operate the vehicle. Once a Key Fob is programmed to a vehicle, it cannot be programmed to any other vehicle.

CAUTION!

- **Always remove the Key Fobs from the vehicle and lock all doors when leaving the vehicle unattended.**
- **For vehicles equipped with Keyless Enter-N-Go™, always remember to place the ignition in the OFF position.**

Duplication of Key Fobs may be performed at an authorized dealer. This procedure consists of programming a blank Key Fob to the vehicle electronics. A blank Key Fob is one that has never been programmed.

NOTE: When having the Sentry Key® Immobilizer System serviced, bring all vehicle Key Fobs with you to the authorized dealer.

Customer Key Programming

Programming Key Fobs or RKE transmitters may be performed at an authorized dealer.

General Information

The Sentry Key® system complies with FCC rules part 15 and with RSS-210 of Industry Canada. Operation is subject to the following conditions:

- This device may not cause harmful interference.
- This device must accept any interference that may be received, including interference that may cause undesired operation.

NOTE: Changes or modifications not expressly approved by the party responsible for compliance could void the user's authority to operate the equipment.

VEHICLE SECURITY ALARM — IF EQUIPPED

The Vehicle Security Alarm monitors the vehicle doors for unauthorized entry and the Keyless Enter-N-Go™ START/STOP button for unauthorized operation. While the Vehicle Security Alarm is armed, interior switches for door locks and decklid release are disabled. If something triggers the alarm, the Vehicle Security Alarm will provide the following audible and visible signals: the horn will pulse, the park lamps and/or turn signals will flash, and the Vehicle Security Light in the instrument cluster will flash.

Rearming Of The System

If something triggers the alarm, and no action is taken to disarm it, the Vehicle Security Alarm will turn the horn off after 29 seconds, 5 seconds between cycles, up to 8 cycles if the trigger remains active and then the Vehicle Security Alarm will rearm itself.

To Arm The System

Follow these steps to arm the Vehicle Security Alarm:

1. Make sure the vehicles ignition is placed in the "OFF" position (refer to "Starting Procedures" in "Starting And Operating" for further information).
   - Make sure the vehicle ignition system is OFF.
2. Perform one of the following methods to lock the vehicle:
   - Push LOCK on the interior power door lock switch with the driver and/or passenger door open.
   - Push the LOCK button on the exterior Passive Entry Door Handle with a valid Key Fob available in the same exterior zone (refer to "Keyless Enter-N-Go™" in "Things To Know Before Starting Your Vehicle" for further information).
   - Push the LOCK button on the Remote Keyless Entry (RKE) transmitter.
3. If any doors are open, close them.

To Disarm The System

The Vehicle Security Alarm can be disarmed using any of the following methods:

- Push the UNLOCK button on the Remote Keyless Entry (RKE) transmitter.
- Grasp the Passive Entry Unlock Door Handle if equipped. Refer to "Keyless Enter-N-Go™" in "Things To Know Before Starting Your Vehicle" for further information.

- Place the vehicle ignition system in the OFF position.
- Push the Keyless Enter-N-Go™ START/STOP button (requires at least one valid Key Fob in the vehicle).

NOTE:

- The driver's door key cylinder and the trunk button on the RKE transmitter cannot arm or disarm the Vehicle Security Alarm.
- When the Vehicle Security Alarm is armed, the interior power door lock switches will not unlock the doors.

The Vehicle Security Alarm is designed to protect your vehicle. However, you can create conditions where the system will give you a false alarm. If one of the previously described arming sequences has occurred, the Vehicle Security Alarm will arm regardless of whether you are in the vehicle or not. If you remain in the vehicle and open a door, the alarm will sound. If this occurs, disarm the Vehicle Security Alarm.

If the Vehicle Security Alarm is armed and the battery becomes disconnected, the Vehicle Security Alarm will remain armed when the battery is reconnected; the exterior lights will flash, the horn will sound. If this occurs, disarm the Vehicle Security Alarm.

Security System Manual Override

The Vehicle Security Alarm will not arm if you lock the doors using the manual door lock plunger.

ILLUMINATED ENTRY — IF EQUIPPED

The courtesy lights will turn on when you use the Remote Keyless Entry (RKE) transmitter to unlock the doors or open any door.

This feature also turns on the approach lighting in the outside mirrors (if equipped).

The lights will fade to off after approximately 30 seconds, or they will immediately fade to off once the ignition is placed in the ON/RUN position from the OFF position.

NOTE:

- The front courtesy overhead console and door courtesy lights will turn on if the dimmer control is in the "Dome ON" position (extreme top position).
- The Illuminated Entry system will not operate if the dimmer control is in the "Dome defeat" position (extreme bottom position).

REMOTE KEYLESS ENTRY (RKE)

The RKE system allows you to lock or unlock the doors, open the trunk, or activate the Panic Alarm from distances up to approximately 66 ft (20 m) using a hand-held Key Fob with RKE transmitter. The RKE transmitter does not need to be pointed at the vehicle to activate the system.

NOTE: Driving at speeds 5 mph (8 km/h) and above disables the system from responding to all RKE transmitter buttons for all RKE transmitters.

0202008029

Key Fob With RKE Transmitter

To Unlock The Doors

Push and release the UNLOCK button on the RKE transmitter once to unlock the driver's door or twice within five seconds to unlock all doors. The turn signal lights will flash to acknowledge the unlock signal. The illuminated entry system will also turn on.

If the vehicle is equipped with Passive Entry, refer to "Keyless Enter-N-Go™" under "Things To Know Before Starting Your Vehicle" for further information.

1st Push Of Key Fob Unlocks

This feature lets you program the system to unlock either the driver's door or all doors on the first push of the UNLOCK button on the RKE transmitter. To change the current setting, refer to "Uconnect® Settings" in "Understanding Your Instrument Panel" for further information.

Flash Lights With Lock

This feature will cause the turn signal lights to flash when the doors are locked with the RKE transmitter. This feature can be turned on or turned off. To change the current setting, refer to "Uconnect® Settings" in "Understanding Your Instrument Panel" for further information.

Headlight Illumination On Approach

This feature activates the headlights for up to 90 seconds when the doors are unlocked with the RKE transmitter. The time for this feature is programmable on vehicles equipped through Uconnect®. To change the current setting, refer to "Uconnect® Settings" in "Understanding Your Instrument Panel" for further information.

To Lock The Doors

Push and release the LOCK button on the RKE transmitter to lock all doors. The turn signal lights will flash, and the horn will chirp to acknowledge the signal.

If the vehicle is equipped with Passive Entry, refer to "Keyless Enter-N-Go™" under "Things To Know Before Starting Your Vehicle" for further information.

Sound Horn With Lock

This feature will cause the horn to chirp when the doors are locked with the RKE transmitter. This feature can be turned on or turned off. To change the current setting, refer to "Uconnect® Settings" in "Understanding Your Instrument Panel" for further information.

To Unlatch The Trunk

Push the TRUNK button on the RKE transmitter two times within five seconds to unlatch the trunk.

If the vehicle is equipped with Passive Entry, refer to "Keyless Enter-N-Go™" under "Things To Know Before Starting Your Vehicle" for further information.

Using The Panic Alarm

To turn the Panic Alarm feature on or off, push and hold the PANIC button on the RKE transmitter for at least one second and release. When the Panic Alarm is activated, the turn signals will flash, the horn will pulse on and off, and the interior lights will turn on.

The Panic Alarm will stay on for three minutes unless you turn it off by either pushing the PANIC button a second time or drive the vehicle at a speed of 15 MPH (24 km/h) or greater.

NOTE:

- The interior lights will turn off if you place the ignition in the ACC or ON/RUN position while the Panic Alarm is activated. However, the exterior lights and horn will remain on.

- You may need to be less than 35 ft (11 m) from the vehicle when using the RKE transmitter to turn off the Panic Alarm due to the radio frequency noises emitted by the system.

Programming Additional Transmitters

Programming Key Fobs or RKE transmitters may be performed at an authorized dealer.

Transmitter Battery Replacement

The recommended replacement battery is one CR2032 battery.

NOTE:

- Perchlorate Material — special handling may apply. See www.dtsc.ca.gov/hazardouswaste/perchlorate
- Do not touch the battery terminals that are on the back housing or the printed circuit board.

1. Remove the emergency key by sliding the mechanical latch on the back of the RKE transmitter sideways with your thumb and then pull the key out with your other hand.

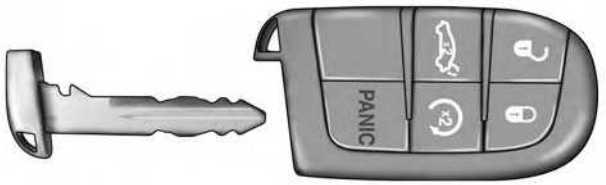

Keyless Ignition Node (KIN) Emergency Key Removal

2. Separating RKE halves requires screw removal, if equipped, and gently prying the two halves of the

RKE transmitter apart. Make sure not to damage the seal during removal.

Separating Keyless Ignition Node (KIN) Transmitter Case

3. Remove the battery by turning the back cover over (battery facing downward) and tapping it lightly on a solid surface such as a table or similar, then replace the battery. When replacing the battery, match the + sign on the battery to the + sign on the inside of the battery clip, located on the back cover. Avoid touching the new battery with your fingers. Skin oils may cause battery deterioration. If you touch a battery, clean it with rubbing alcohol.
4. To assemble the RKE transmitter case, snap the two halves together, reposition and secure the screw as shown in step #2 for removal.

General Information

This device complies with Part 15 of the FCC rules and RSS 210 of Industry Canada. Operation is subject to the following conditions:

- This device may not cause harmful interference.
- This device must accept any interference received, including interference that may cause undesired operation.

NOTE: Changes or modifications not expressly approved by the party responsible for compliance could void the user's authority to operate the equipment.

If your RKE transmitter fails to operate from a normal distance, check for these two conditions:

1. A weak battery in the transmitter. The expected life of the battery is a minimum of three years.
2. Closeness to a radio transmitter such as a radio station tower, airport transmitter, and some mobile or CB radios.

REMOTE STARTING SYSTEM — IF EQUIPPED

This system uses the Remote Keyless Entry (RKE) transmitter to start the engine conveniently from outside the vehicle while still maintaining security. The system has a range of approximately 300 ft (91 m).

NOTE:

- The vehicle must be equipped with an automatic transmission to be equipped with Remote Start.
- Obstructions between the vehicle and the Key Fob may reduce this range.

How To Use Remote Start

All of the following conditions must be met before the engine will remote start:

- Shift lever in PARK
- Doors closed
- Hood closed
- Hazard switch off
- Brake switch inactive (brake pedal not pushed)
- Battery at an acceptable charge level

- RKE PANIC button not pushed
- System not disabled from previous remote start event
- Vehicle security alarm not active
- Ignition in Off position (Keyless Enter-N-Go™)

WARNING!

- **Do not start or run an engine in a closed garage or confined area. Exhaust gas contains Carbon Monoxide (CO) which is odorless and colorless. Carbon Monoxide is poisonous and can cause serious injury or death when inhaled.**
- **Keep Remote Keyless Entry (RKE) transmitters away from children. Operation of the Remote Start System, windows, door locks or other controls could cause serious injury or death.**

To Enter Remote Start Mode

Push and release the REMOTE START button on the RKE transmitter twice within five seconds. The vehicle doors will lock, the parking lights will flash, and horn will chirp twice (if programmed). Then, the engine will start and the vehicle will remain in the Remote Start mode for a 15-minute cycle.

NOTE:

- If an engine fault is present, the vehicle will start and then shut down 10 seconds later.
- The park lamps will turn on and remain on during Remote Start mode.
- For security, power window and power sunroof operation (if equipped) are disabled when the vehicle is in the Remote Start mode.

- The engine can be started two consecutive times with the RKE transmitter. However, the ignition must be activated by pushing the START/STOP button twice (or the ignition must be placed in the ON/RUN position) before you can repeat the start sequence for a third cycle.

To Exit Remote Start Mode Without Driving The Vehicle

Push and release the REMOTE START button one time or allow the engine to run for the entire 15-minute cycle.

NOTE: To avoid unintentional shut downs, the system will disable the one time push of the REMOTE START button for two seconds after receiving a valid Remote Start request.

To Exit Remote Start Mode And Drive The Vehicle

Before the end of 15 minute cycle, push and release the UNLOCK button on the RKE transmitter to unlock the doors, or unlock the vehicle using Passive Entry via the door handles, and disarm the Vehicle Security Alarm (if equipped). Then, prior to the end of the 15 minute cycle, push and release the START/STOP button.

NOTE: For vehicles equipped with the Keyless Enter-N-Go™ feature, the message "Push Button/Insert Key" will display in the Driver Information Display (DID) until you push the START button.

Cancel Remote Start

Remote Starting will also cancel if any of the following occur:

- The engine stalls or engine speed exceeds 2500 rpm.
- Any engine warning lights come on.
- Low Fuel Light turns on.
- The hood is opened.

- The hazard switch is pushed.
- The shift lever is moved out of PARK.
- The brake pedal is pushed.

DOOR LOCKS

Manual Door Locks

To lock each door, push the door lock knob on each door trim panel downward. To unlock the front doors, pull the inside door handle to the first detent. To unlock the rear doors, pull the door lock knob on the door trim panel upward.

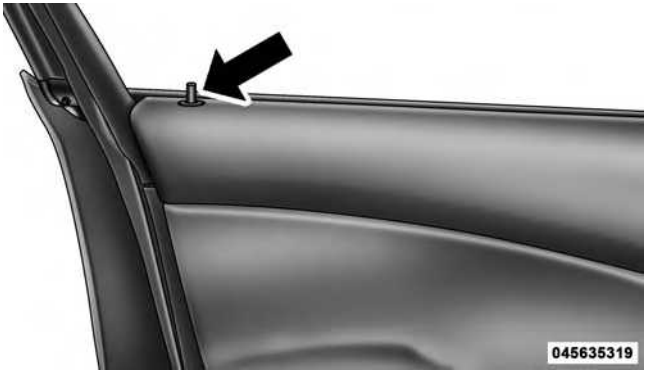

Door Lock Knob

If the door lock knob is down when you shut the door, the door will lock. Therefore, make sure the Key Fob is not inside the vehicle before closing the door.

WARNING!

- **For personal security and safety in the event of a collision, lock the vehicle doors before you drive as well as when you park and leave the vehicle.**
- **When leaving the vehicle, always make sure the keyless ignition node is in the "OFF" mode, remove the Key Fob from the vehicle and lock your vehicle.**
- **Never leave children alone in a vehicle, or with access to an unlocked vehicle. Allowing children to be in a vehicle unattended is dangerous for a number of reasons. A child or others could be seriously or fatally injured. Children should be warned not to touch the parking brake, brake pedal or the gear selector.**

(Continued)

WARNING! ***(Continued)***

- **Do not leave the Key Fob in or near the vehicle, or in a location accessible to children, and do not leave the ignition of a vehicle equipped with Keyless Enter-N-Go™ in the ACC or ON/RUN mode. A child could operate power windows, other controls, or move the vehicle.**

Power Door Locks

A power door lock switch is on each front door trim panel. Use this switch to lock or unlock the doors.

Power Door Lock Switch

The doors can also be locked and unlocked with the Keyless Enter-N-Go™ (Passive Entry) system. For further information, refer to "Keyless Enter-N-Go™" under "Things To Know Before Starting Your Vehicle" for further information.

If you push the power door lock switch while the ignition is in the ACC or ON/RUN position, and any front door is open, the power locks will not operate. This prevents you from accidentally locking the Key Fob in the vehicle. Placing the ignition in the OFF position or closing the door will allow the locks to operate. If a door is open, and the ignition is in the ACC or ON/RUN position, a chime will sound as a reminder to remove the Key Fob.

Automatic Door Locks — If Equipped

The auto door lock feature default condition is enabled. When enabled, the door locks will lock automatically when the vehicle's speed exceeds 15 mph (24 km/h). The auto door lock feature can be enabled or disabled by your authorized dealer per written request of the customer. Please see your authorized dealer for service.

Automatic Unlock Doors On Exit

The doors will unlock automatically on vehicles with power door locks if:

1. The Automatic Unlock Doors On Exit feature is enabled.
2. The vehicle was in motion, then speed returned to 0 mph (0 km/h) and the transmission is placed in PARK.
3. The driver door is opened.
4. The doors were not previously unlocked.

Automatic Unlock Doors On Exit Programming

To change the current setting, refer to "Uconnect® Settings" in "Understanding Your Instrument Panel" for further information.

NOTE: Use the Automatic Unlock Doors On Exit feature in accordance with local laws.

Child-Protection Door Lock System — Rear Doors

To provide a safer environment for small children riding in the rear seats, the rear doors are equipped with Child-Protection Door Lock system.

To Engage Or Disengage The Child-Protection Door Lock System

1. Open the rear door.
2. Insert the tip of the emergency key into the lock and rotate to the LOCK or UNLOCK position.
3. Repeat steps 1 and 2 for the opposite rear door.

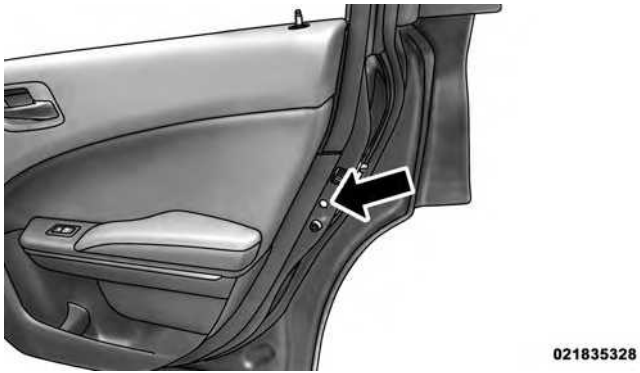

Child-Protection Door Lock Location

Child-Protection Door Lock Function

WARNING!

Avoid trapping anyone in a vehicle in a collision. Remember that the rear doors can only be opened from the outside when the Child-Protection locks are engaged.

NOTE: For emergency exit with the system engaged, move the lock knob up (unlocked position), roll down the window and open the door with the outside door handle.

KEYLESS ENTER-N-GO™

The Passive Entry system is an enhancement to the vehicle's Remote Keyless Entry (RKE) system and a feature of Keyless Enter-N-Go™. This feature allows you to lock and unlock the vehicle's door(s) without having to push the RKE transmitter lock or unlock buttons.

NOTE:

- Passive Entry may be programmed ON/OFF. Refer to "Uconnect® Settings" in "Understanding Your Instrument Panel" for further information.
- If wearing gloves on your hands, or if it has been raining on the Passive Entry door handle, the unlock sensitivity can be affected, resulting in a slower response time.
- If the vehicle is unlocked by the Passive Entry Door Handle, and no door goes ajar within 60 seconds, the vehicle will re-lock and if equipped, will arm the security alarm.

To Unlock From The Driver's Side:

With a valid Passive Entry RKE transmitter within 5 ft (1.5 m) of the driver door handle, grab the front driver door handle to unlock the driver's door automatically. The interior door panel lock knob will raise when the door is unlocked.

Grab The Door Handle To Unlock

NOTE: If "Unlock All Doors 1st Press" is programmed, all doors will unlock when you grab hold of the front driver's door handle. To select between "Unlock Driver Door 1st Press" and "Unlock All Doors 1st Press," refer to "Uconnect® Settings" in "Understanding Your Instrument Panel" for further information.

To Unlock From The Passenger Side:

With a valid Passive Entry RKE transmitter within 5 ft (1.5 m) of the passenger door handle, grab the front passenger door handle to unlock all four doors automatically. The interior door panel lock knob will raise when the door is unlocked.

NOTE: All doors will unlock when the front passenger door handle is grabbed regardless of the driver's door unlock preference setting ("Unlock Driver Door 1st Press" or "Unlock All Doors 1st Press").

Preventing Inadvertent Locking Of Passive Entry RKE Transmitter In Vehicle (FOBIK-Safe)

To minimize the possibility of unintentionally locking a Passive Entry RKE transmitter inside your vehicle, the Passive Entry system is equipped with an automatic door unlock feature which will function if the ignition is in the OFF position.

FOBIK-Safe only executes in vehicles with passive entry. There are three situations that trigger a FOBIK-Safe search in any passive entry vehicle.

1. A lock request is made by a valid Passive Entry RKE transmitter while a door is ajar.
2. A lock request is made by the Passive Entry door handle while a door is ajar.
3. A lock request is made by the door panel switch while the door is ajar.

When any of these situations occur, after all ajar doors are shut, the FOBIK-Safe search will be executed. If it finds a Passive Entry RKE transmitter inside the car, and it does not find any Passive Entry RKE transmitters outside the car, the car will unlock and alert the customer.

NOTE: The vehicle will only unlock the doors when a valid Passive Entry RKE transmitter is detected inside the vehicle, and no valid Passive Entry RKE transmitter is detected outside the vehicle. The vehicle will not unlock the doors when any of the following conditions are true:

- The doors are manually locked using the door lock knobs.
- There is a valid Passive Entry RKE transmitter outside the vehicle and within 5 ft (1.5 m) of either Passive Entry door handle.
- Three attempts are made to lock the doors using the door panel switch and then close the doors.

To Enter The Trunk

With a valid Passive Entry RKE transmitter within 5 ft (1.5 m) of the deck lid, push the button on the right side of the deck lid.

Trunk Button

NOTE: If you inadvertently leave your vehicle's Passive Entry RKE transmitter in the trunk and try to close the deck lid, the deck lid will automatically unlatch unless another one of the vehicle's Passive Entry RKE transmitters is outside the vehicle and within 5 ft (1.5 m) of the deck lid.

To Lock The Vehicle's Doors

With one of the vehicle's Passive Entry RKE transmitters within 5 ft (1.5 m) of the driver or passenger front door handles, push the door handle LOCK button to lock all four doors.

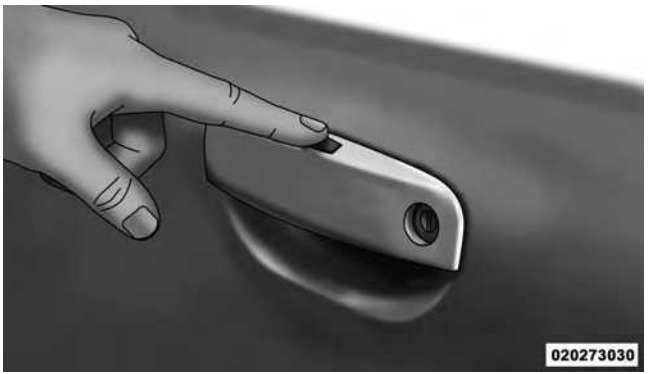

Push The Door Handle Button To Lock

Do NOT grab the door handle when pushing the door handle button. This could unlock the door(s).

Do NOT Grab The Handle When Locking

NOTE:

- After pushing the door handle button, you must wait two seconds before you can lock or unlock the doors, using either Passive Entry door handle. This is done to allow you to check if the vehicle is locked by pulling the door handle, without the vehicle reacting and unlocking.
- The Passive Entry system will not operate if the RKE transmitter battery is dead.

The vehicle doors can also be locked by using the RKE transmitter lock button or the lock button located on the vehicle's interior door panel.

WINDOWS

Power Windows

The window controls on the driver's door control all the door windows.

Power Window Switches

There are single window controls on each passenger door trim panel, which operate the passenger door windows. The window controls will operate only when the ignition is in the ACC or ON/RUN position.

NOTE: For vehicles equipped with the Uconnect®, the power window switches will remain active for up to 10 minutes after the ignition is placed in the OFF position. Opening either front door will cancel this feature. The time is programmable. Refer to "Uconnect® Settings" in "Understanding Your Instrument Panel" for further information.

WARNING!

Never leave children unattended in a vehicle, and do not let children play with power windows. Do not leave the Key Fob in or near the vehicle, or in a location accessible to children, and do not leave the

(Continued)

WARNING! ***(Continued)***

ignition of a vehicle equipped with Keyless Enter-N-Go™ in the ACC or ON/RUN mode. Occupants, particularly unattended children, can become entrapped by the windows while operating the power window switches. Such entrapment may result in serious injury or death.

AUTO-Down Feature

The driver door power window switch and some model passenger door power window switches have an AUTO-down feature. Push the window switch to the second detent, release, and the window will go down automatically.

To open the window part way, push the window switch to the first detent and release it when you want the window to stop.

To stop the window from going all the way down during the AUTO-down operation, pull up on the switch briefly.

AUTO-Up Feature With Anti-Pinch Protection

Lift the window switch to the second detent, release, and the window will go up automatically.

To stop the window from going all the way up during the AUTO operation, push down on the switch briefly.

To close the window part way, lift the window switch to the first detent and release it when you want the window to stop.

NOTE:

- If the window runs into any obstacle during auto-closure, it will reverse direction and then go back down. Remove the obstacle and use the window switch again to close the window.
- Any impact due to rough road conditions may trigger the auto-reverse function unexpectedly during auto-closure. If this happens, pull the switch lightly to the first detent and hold to close the window manually.

WARNING!

There is no anti-pinch protection when the window is almost closed. Be sure to clear all objects from the window before closing.

Reset Auto-Up

Should the Auto Up feature stop working, the window may need to be reset. To reset Auto Up:

1. Make sure the door is fully closed.
2. Pull the window switch up to close the window completely and continue to hold the switch up for an additional two seconds after the window is closed.
3. Push the window switch down firmly to the second detent to open the window completely and continue to hold the switch down for an additional two seconds after the window is fully open.

Window Lockout Switch

The window lockout switch on the driver's door trim panel allows you to disable the window controls on the rear passenger doors. To disable the window controls, push and release the window lockout button (setting it in the DOWN position). To enable the window controls, push and release the window lockout button again (setting it in the UP position).

Window Lockout Switch

Wind Buffeting

Wind buffeting can be described as the perception of pressure on the ears or a helicopter-type sound in the ears. Your vehicle may exhibit wind buffeting with the windows down, or the sunroof (if equipped) in certain open or partially open positions. This is a normal occurrence and can be minimized. If the buffeting occurs with the rear windows open, then open the front and rear windows together to minimize the buffeting. If the buffeting occurs with the sunroof open, adjust the sunroof opening to minimize the buffeting.

TRUNK LOCK AND RELEASE

The trunk lid can be released from inside the vehicle by pressing the TRUNK RELEASE button located on the instrument panel to the left of the steering wheel.

NOTE: The transmission must be in PARK before the button will operate.

Trunk Release Button

The trunk lid can be released from outside the vehicle by pressing the TRUNK button on the Remote Keyless Entry (RKE) transmitter twice within five seconds.

With the ignition in the ON/RUN position, the Trunk Open symbol will display in the instrument cluster indicating that the trunk is open. The odometer display will reappear once the trunk is closed.

With the ignition in the OFF position , the Trunk Open symbol will display until the trunk is closed.

Refer to “Keyless Enter-N-Go™” in “Things To Know Before Starting Your Vehicle” for more information on trunk operation with the Passive Entry feature.

TRUNK SAFETY WARNING

WARNING!

Do not allow children to have access to the trunk, either by climbing into the trunk from outside, or through the inside of the vehicle. Always close the trunk lid when your vehicle is unattended. Once in the trunk, young children may not be able to escape, even if they entered through the rear seat. If trapped in the trunk, children can die from suffocation or heat stroke.

Trunk Emergency Release

As a security measure, a Trunk Internal Emergency Release lever is built into the trunk latching mechanism. In the event of an individual being locked inside the trunk, the trunk can be simply opened by pulling on the glow-in-the-dark handle attached to the trunk latching mechanism.

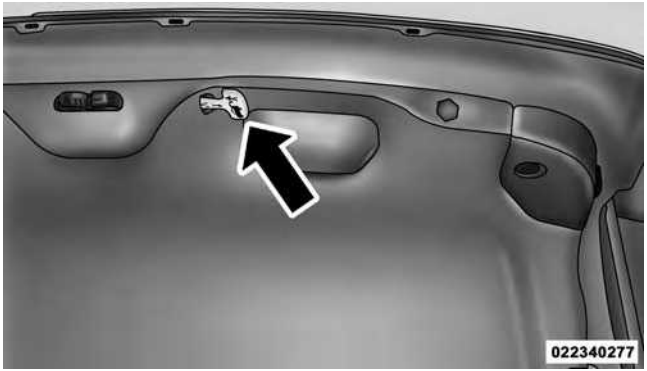

Trunk Emergency Internal Release

OCCUPANT RESTRAINT SYSTEMS

Some of the most important safety features in your vehicle are the restraint systems:

- Seat Belt Systems
- Supplemental Restraint Systems (SRS) Air Bags
- Child Restraints

Important Safety Precautions

Please pay close attention to the information in this section. It tells you how to use your restraint system properly, to keep you and your passengers as safe as possible.

Here are some simple steps you can take to minimize the risk of harm from a deploying air bag:

1. Children 12 years old and under should always ride buckled up in a vehicle with a rear seat.
2. If a child from 2 to 12 years old (not in a rear-facing child restraint) must ride in the front passenger seat, move the seat as far back as possible and use the proper child restraint. (Refer to "Child Restraints")
3. Children that are not big enough to wear the vehicle seat belt properly (Refer to "Child Restraints") should be secured in a vehicle with a rear seat in child restraints or belt-positioning booster seats. Older children who do not use child restraints or belt-positioning booster seats should ride properly buckled up in a vehicle with a rear seat.
4. Never allow children to slide the shoulder belt behind them or under their arm.
5. You should read the instructions provided with your child restraint to make sure that you are using it properly.

6. All occupants should always wear their lap and shoulder belts properly.
7. The driver and front passenger seats should be moved back as far as practical to allow the Advanced Front Air Bags room to inflate.
8. Do not lean against the door or window. If your vehicle has side air bags, and deployment occurs, the side air bags will inflate forcefully into the space between you and the door and you could be injured.
9. If the air bag system in this vehicle needs to be modified to accommodate a disabled person, contact the Customer Center. Phone numbers are provided under "If You Need Assistance."

WARNING!

- **Never place a rear-facing child restraint in front of an air bag. A deploying Passenger Advanced Front Air Bag can cause death or serious injury to a child 12 years or younger, including a child in a rear-facing child restraint.**
- **Only use rear-facing child restraint in a vehicle with a rear seat.**

Seat Belt Systems

Buckle up even though you are an excellent driver, even on short trips. Someone on the road may be a poor driver and could cause a collision that includes you. This can happen far away from home or on your own street.

Research has shown that seat belts save lives, and they can reduce the seriousness of injuries in a collision. Some of the worst injuries happen when people are thrown from the vehicle. Seat belts reduce the possibility of

ejection and the risk of injury caused by striking the inside of the vehicle. Everyone in a motor vehicle should be belted at all times.

Enhanced Seat Belt Use Reminder System (BeltAlert)

BeltAlert is a feature intended to remind the driver and outboard front passenger (if equipped with outboard front passenger BeltAlert) to buckle their seat belts. The feature is active whenever the ignition is in the START or ON/RUN position. If the driver or outboard front seat passenger is unbelted, the Seat Belt Reminder Light will turn on and remain on until both outboard front seat belts are buckled.

The BeltAlert warning sequence begins after the vehicle speed is over 5 MPH (8 km/h) by blinking the Seat Belt Reminder Light and sounding an intermittent chime. Once the sequence starts, it will continue for the entire duration or until the respective seat belts are buckled. After the sequence completes, the Seat Belt Reminder Light remains illuminated until the respective seat belts are buckled. The driver should instruct all other occupants to buckle their seat belts. If an outboard front seat belt is unbuckled while traveling at speeds greater than 5 MPH (8 km/h), BeltAlert will provide both audio and visual notification.

The outboard front passenger seat BeltAlert is not active when the outboard front passenger seat is unoccupied. BeltAlert may be triggered when an animal or heavy object is on the outboard front passenger seat or when the seat is folded flat (if equipped). It is recommended that pets be restrained in the rear seat (if equipped) in pet harnesses or pet carriers that are secured by seat belts, and cargo is properly stowed.

BeltAlert can be activated or deactivated by your authorized dealer. Chrysler Group LLC does not recommend deactivating BeltAlert.

NOTE: If BeltAlert has been deactivated, the Seat Belt Reminder Light will continue to illuminate while the driver's or outboard front passenger's (if equipped with BeltAlert) seat belt remains unbuckled.

Lap/Shoulder Belts

All seating positions in your vehicle are equipped with lap/shoulder belts.

The seat belt webbing retractor will lock only during very sudden stops or collisions. This feature allows the shoulder part of the seat belt to move freely with you under normal conditions. However, in a collision the seat belt will lock and reduce your risk of striking the inside of the vehicle or being thrown out of the vehicle.

WARNING!

- **Relying on the air bags alone could lead to more severe injuries in a collision. The air bags work with your seat belt to restrain you properly. In some collisions, the air bags won't deploy at all. Always wear your seat belt even though you have air bags.**
- **In a collision, you and your passengers can suffer much greater injuries if you are not properly buckled up. You can strike the interior of your vehicle or other passengers, or you can be thrown out of the vehicle. Always be sure you and others in your vehicle are buckled up properly.**
- **It is dangerous to ride in a cargo area, inside or outside of a vehicle. In a collision, people riding in these areas are more likely to be seriously injured or killed.**

(Continued)

WARNING! *(Continued)*

- **Do not allow people to ride in any area of your vehicle that is not equipped with seats and seat belts.**
- **Be sure everyone in your vehicle is in a seat and using a seat belt properly.**
- **Wearing your seat belt incorrectly could make your injuries in a collision much worse. You might suffer internal injuries, or you could even slide out of the seat belt. Follow these instructions to wear your seat belt safely and to keep your passengers safe, too.**
- **Two people should never be belted into a single seat belt. People belted together can crash into one another in a collision, hurting one another badly. Never use a lap/shoulder belt or a lap belt for more than one person, no matter what their size.**

(Continued)

WARNING! *(Continued)*

- **A lap belt worn too high can increase the risk of injury in a collision. The seat belt forces won't be at the strong hip and pelvic bones, but across your abdomen. Always wear the lap part of your seat belt as low as possible and keep it snug.**
- **A twisted seat belt may not protect you properly. In a collision, it could even cut into you. Be sure the seat belt is flat against your body, without twists. If you can't straighten a seat belt in your vehicle, take it to your authorized dealer immediately and have it fixed.**
- **A seat belt that is buckled into the wrong buckle will not protect you properly. The lap portion could ride too high on your body, possibly causing internal injuries. Always buckle your seat belt into the buckle nearest you.**

(Continued)

WARNING! ***(Continued)***

- **A seat belt that is too loose will not protect you properly. In a sudden stop, you could move too far forward, increasing the possibility of injury. Wear your seat belt snugly.**
- **A seat belt that is worn under your arm is dangerous. Your body could strike the inside surfaces of the vehicle in a collision, increasing head and neck injury. A seat belt worn under the arm can cause internal injuries. Ribs aren't as strong as shoulder bones. Wear the seat belt over your shoulder so that your strongest bones will take the force in a collision.**

(Continued)

WARNING! ***(Continued)***

- **A shoulder belt placed behind you will not protect you from injury during a collision. You are more likely to hit your head in a collision if you do not wear your shoulder belt. The lap and shoulder belt are meant to be used together.**
- **A frayed or torn seat belt could rip apart in a collision and leave you with no protection. Inspect the seat belt system periodically, checking for cuts, frays, or loose parts. Damaged parts must be replaced immediately. Do not disassemble or modify the seat belt system. Seat belt assemblies must be replaced after a collision.**

Lap/Shoulder Belt Operating Instructions

1. Enter the vehicle and close the door. Sit back and adjust the front seat.

2. The seat belt latch plate is above the back of the front seat, and next to your arm in the rear seat (for vehicles equipped with a rear seat). Grasp the latch plate and pull out the seat belt. Slide the latch plate up the webbing as far as necessary to allow the seat belt to go around your lap.

Pulling Out The Latch Plate

3. When the belt is long enough to fit, insert the latch plate into the buckle until you hear a "click."

Inserting Latch Plate Into Buckle

Positioning The Lap Belt

4. Position the lap belt so that it is snug and lies low across your hips, below your abdomen. To remove slack in the lap belt portion, pull up on the shoulder belt. To loosen the lap belt if it is too tight, tilt the latch plate and pull on the lap belt. A snug seat belt reduces the risk of sliding under the seat belt in a collision.
5. Position the shoulder belt across the shoulder and chest with minimal, if any slack so that it is comfortable and not resting on your neck. The retractor will withdraw any slack in the shoulder belt.
6. To release the belt, push the red button on the buckle. The seat belt will automatically retract to its stowed position. If necessary, slide the latch plate down the webbing to allow the seat belt to retract fully.

Lap/Shoulder Belt Untwisting Procedure

Use the following procedure to untwist a twisted lap/shoulder belt.

1. Position the latch plate as close as possible to the anchor point.
2. At about 6 to 12 inches (15 to 30 cm) above the latch plate, grasp and twist the seat belt webbing 180° to create a fold that begins immediately above the latch plate.

3. Slide the latch plate upward over the folded webbing. The folded webbing must enter the slot at the top of the latch plate.
4. Continue to slide the latch plate up until it clears the folded webbing and the seat belt is no longer twisted.

Adjustable Upper Shoulder Belt Anchorage

In the driver and front passenger seats, the top of the shoulder belt can be adjusted upward or downward to position the seat belt away from your neck. Push or squeeze the anchorage button to release the anchorage, and move it up or down to the position that serves you best.

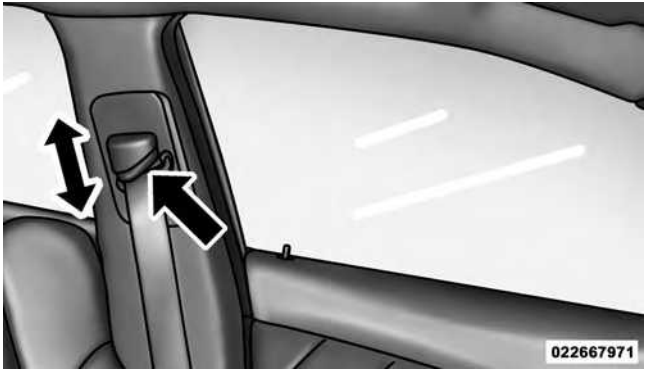

Adjustable Anchorage

As a guide, if you are shorter than average, you will prefer the shoulder belt anchorage in a lower position, and if you are taller than average, you will prefer the shoulder belt anchorage in a higher position. After you release the anchorage button, try to move it up or down to make sure that it is locked in position.

NOTE: The adjustable upper shoulder belt anchorage is equipped with an Easy Up feature. This feature allows the shoulder belt anchorage to be adjusted in the upward position without pushing or squeezing the release button. To verify the shoulder belt anchorage is latched, pull downward on the shoulder belt anchorage until it is locked into position.

Seat Belt Extender

If a seat belt is not long enough to fit properly, even when the webbing is fully extended and the adjustable upper shoulder belt anchorage (if equipped) is in its lowest position, your authorized dealer can provide you with a Seat Belt Extender. The Seat Belt Extender should be used only if the existing seat belt is not long enough. When the Seat Belt Extender is not required for a different occupant, it must be removed.

WARNING!

- **ONLY use a Seat Belt Extender if it is physically required in order to properly fit the original seat belt system. DO NOT USE the Seat Belt Extender if, when worn, the distance between the front edge of the Seat Belt Extender buckle and the center of the occupant's body is LESS than 6 inches.**
- **Using a Seat Belt Extender when not needed can increase the risk of serious injury or death in a collision. Only use the Seat Belt Extender when the lap belt is not long enough and only use in the recommended seating positions. Remove and store the Seat Belt Extender when not needed.**

Seat Belts And Pregnant Women

We recommend that pregnant women use the seat belts throughout their pregnancy. Keeping the mother safe is the best way to keep the baby safe.

Pregnant women should wear the lap part of the seat belt across the thighs and as snug across the hips as possible. Keep the seat belt low so that it does not come across the abdomen. That way the strong bones of the hips will take the force if there is a collision.

Seat Belt Pretensioner

The front seat belt system is equipped with pretensioning devices that are designed to remove slack from the seat belt in the event of a collision. These devices may improve the performance of the seat belt by removing slack from the seat belt early in a collision. Pretensioners work for all size occupants, including those in child restraints.

NOTE: These devices are not a substitute for proper seat belt placement by the occupant. The seat belt still must be worn snugly and positioned properly.

The pretensioners are triggered by the Occupant Restraint Controller (ORC). Like the air bags, the pretensioners are single use items. A deployed pretensioner or a deployed air bag must be replaced immediately.

Energy Management Feature

This vehicle has a seat belt system with an Energy Management feature in the front seating positions that may help further reduce the risk of injury in the event of a collision. This seat belt system has a retractor assembly that is designed to release webbing in a controlled manner.

Automatic Locking Retractor (ALR) — If Equipped

The seat belts in the passenger seating positions may be equipped with Switchable Automatic Locking Retractors (ALR) which are used to secure a child restraint system. For additional information, refer to “Installing Child Restraints Using The Vehicle Seat Belt” under the “Child

Restraints" section of this manual. The table below defines the type of feature for each seating position.

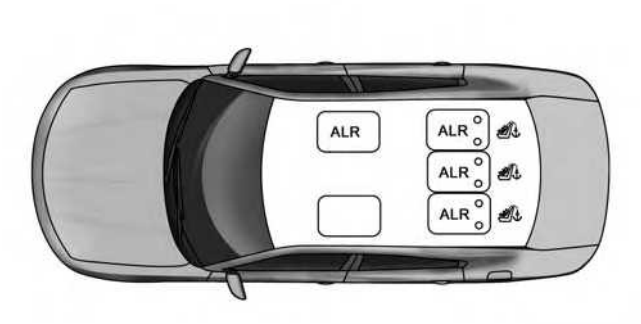

- ALR = Switchable Automatic Locking Retractor

If the passenger seating position is equipped with an ALR and is being used for normal usage, only pull the seat belt webbing out far enough to comfortably wrap around the occupant's mid-section so as to not activate the ALR. If the ALR is activated, you will hear a ratcheting sound as the seat belt retracts. Allow the webbing to retract completely in this case and then carefully pull out only the amount of webbing necessary to comfortably wrap around the occupant's mid-section. Slide the latch plate into the buckle until you hear a "click."

In Automatic Locking Mode, the shoulder belt is automatically pre locked. The seat belt will still retract to remove any slack in the shoulder belt. Use the Automatic Locking Mode anytime a child restraint is installed in a seating position that has a seat belt with this feature. Children 12 years old and under should always be properly restrained in a vehicle with a rear seat.

WARNING!

- **Never place a rear-facing child restraint in front of an air bag. A deploying Passenger Advanced Front Air Bag can cause death or serious injury to a child 12 years or younger, including a child in a rear-facing child restraint.**
- **Only use rear-facing child restraint in a vehicle with a rear seat.**

How To Engage The Automatic Locking Mode

1. Buckle the combination lap and shoulder belt.
2. Grasp the shoulder portion and pull downward until the entire seat belt is extracted.
3. Allow the seat belt to retract. As the seat belt retracts, you will hear a clicking sound. This indicates the seat belt is now in the Automatic Locking Mode.

How To Disengage The Automatic Locking Mode

Unbuckle the combination lap/shoulder belt and allow it to retract completely to disengage the Automatic Locking Mode and activate the vehicle sensitive (emergency) locking mode.

WARNING!

- **The seat belt assembly must be replaced if the switchable Automatic Locking Retractor (ALR) feature or any other seat belt function is not working properly when checked according to the procedures in the Service Manual.**
- **Failure to replace the seat belt assembly could increase the risk of injury in collisions.**

(Continued)

WARNING! *(Continued)*

- **Do not use the Automatic Locking Mode to restrain occupants who are wearing the seat belt or children who are using booster seats. The locked mode is only used to install rear-facing or forward-facing child restraints that have a harness for restraining the child.**

Supplemental Restraint System (SRS)

Air Bag System Components

Your vehicle may be equipped with the following air bag system components:

- Occupant Restraint Controller (ORC)
- Air Bag Warning Light
- Steering Wheel and Column
- Instrument Panel
- Knee Impact Bolsters
- Advanced Front Air Bags
- Supplemental Side Air Bags
- Supplemental Knee Air Bags
- Front and Side Impact Sensors
- Seat Belt Pretenioners
- Seat Belt Buckle Switch
- Seat Track Position Sensors

Advanced Front Air Bags

This vehicle has Advanced Front Air Bags for both the driver and front passenger as a supplement to the seat belt restraint systems. The driver's Advanced Front Air Bag is mounted in the center of the steering wheel. The passenger's Advanced Front Air Bag is mounted in the instrument panel, above the glove compartment. The words "SRS AIRBAG" or "AIRBAG" are embossed on the air bag covers.

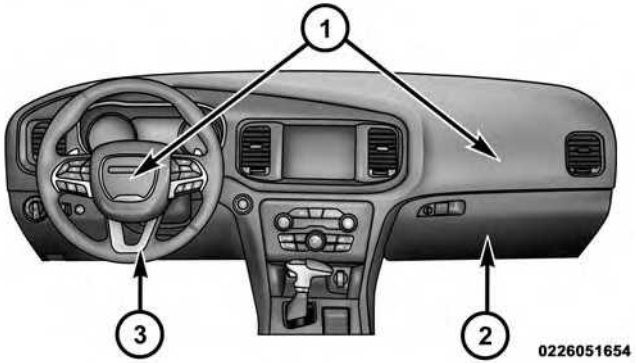

Advanced Front Air Bag And Knee Bolster Locations

1 — Driver And Passenger Advanced Front Air Bags
2 — Passenger Knee Impact Bolster
3 — Driver Knee Impact Bolster/Supplemental Driver Knee Air Bag

WARNING!

- **Being too close to the steering wheel or instrument panel during Advanced Front Air Bag deployment could cause serious injury, including death. Air bags need room to inflate. Sit back, comfortably extending your arms to reach the steering wheel or instrument panel.**
- **Never place a rear-facing child restraint in front of an air bag. A deploying Passenger Advanced Front Air Bag can cause death or serious injury to a child 12 years or younger, including a child in a rear-facing child restraint.**
- **Only use a rear-facing child restraint in a vehicle with a rear seat.**

Advanced Front Air Bag Features

The Advanced Front Air Bag system has multistage driver and front passenger air bags. This system provides output appropriate to the severity and type of collision as determined by the Occupant Restraint Controller (ORC), which may receive information from the front impact sensors or other system components.

The first stage inflator is triggered immediately during an impact that requires air bag deployment. A low energy output is used in less severe collisions. A higher energy output is used for more severe collisions.

This vehicle may be equipped with driver and/or front passenger seat track position sensors that may adjust the inflation rate of the Advanced Front Air Bags based upon seat position.

This vehicle may be equipped with a driver and/or front passenger seat belt buckle switch that detects whether

the driver or front passenger seat belt is buckled. The seat belt buckle switch may adjust the inflation rate of the Advanced Front Air Bags.

WARNING!

- **No objects should be placed over or near the air bag on the instrument panel or steering wheel, because any such objects could cause harm if the vehicle is in a collision severe enough to cause the air bags to inflate.**
- **Do not put anything on or around the air bag covers or attempt to open them manually. You may damage the air bags and you could be injured because the air bags may no longer be functional. The protective covers for the air bag cushions are designed to open only when the air bags are inflating.**

(Continued)

WARNING! ***(Continued)***

- **Relying on the air bags alone could lead to more severe injuries in a collision. The air bags work with your seat belt to restrain you properly. In some collisions, air bags won't deploy at all. Always wear your seat belts even though you have air bags.**

Advanced Front Air Bag Operation

Advanced Front Air Bags are designed to provide additional protection by supplementing the seat belts. Advanced Front Air Bags are not expected to reduce the risk of injury in rear, side, or rollover collisions. The Advanced Front Air Bags will not deploy in all frontal collisions, including some that may produce substantial vehicle damage — for example, some pole collisions, truck underrides, and angle offset collisions.

On the other hand, depending on the type and location of impact, Advanced Front Air Bags may deploy in crashes with little vehicle front-end damage but that produce a severe initial deceleration.

Because air bag sensors measure vehicle deceleration over time, vehicle speed and damage by themselves are not good indicators of whether or not an air bag should have deployed.

Seat belts are necessary for your protection in all collisions, and also are needed to help keep you in position, away from an inflating air bag.

When the ORC detects a collision requiring the Advanced Front Air Bags, it signals the inflator units. A large quantity of non-toxic gas is generated to inflate the Advanced Front Air Bags.

The steering wheel hub trim cover and the upper right side of the instrument panel separate and fold out of the way as the air bags inflate to their full size. The Advanced Front Air Bags fully inflate in less time than it takes to blink your eyes. The air bags then quickly deflate while helping to restrain the driver and front passenger.

Knee Impact Bolsters

The Knee Impact Bolsters help protect the knees of the driver and front passenger, and position the front occupants for improved interaction with the Advanced Front Air Bags.

WARNING!

- **Do not drill, cut, or tamper with the knee impact bolsters in any way.**
- **Do not mount any accessories to the knee impact bolsters such as alarm lights, stereos, citizen band radios, etc.**

Supplemental Driver Knee Air Bag

This vehicle is equipped with a Supplemental Driver Knee Air Bag mounted in the instrument panel below the steering column. The Supplemental Driver Knee Air Bag provides enhanced protection during a frontal impact by working together with the seat belts, pretensioners, and Advanced Front Air Bags.

Supplemental Side Air Bags

Your vehicle is equipped with two types of side air bags:

1. Supplemental Seat-Mounted Side Air Bags (SABs): Located in the outboard side of the front seats. The SABs are marked with a "SRS AIRBAG" or "AIRBAG" label sewn into the outboard side of the seats.

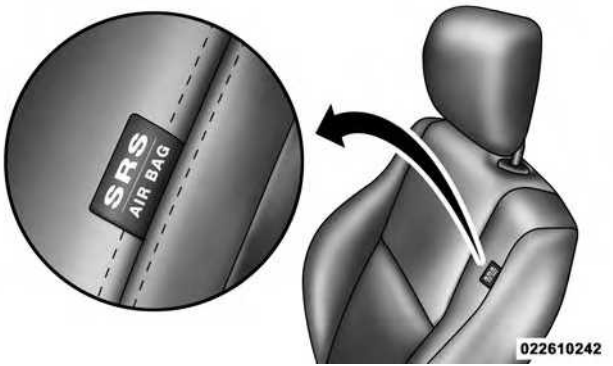

Front Supplemental Seat-Mounted Side Air Bag Label

The SABs may help to reduce the risk of occupant injury during certain side impact and certain rollover events, in addition to the injury reduction potential provided by the seat belts and body structure.

When the SAB deploys, it opens the seam on the outboard side of the seatback's trim cover. The inflating SAB

deploys through the seat seam into the space between the occupant and the door. The SAB moves at a very high speed and with such a high force that it could injure you if you are not seated properly, or if items are positioned in the area where the SAB inflates. Children are at an even greater risk of injury from a deploying air bag.

WARNING!

Do not use accessory seat covers or place objects between you and the Side Air Bags; the performance could be adversely affected and/or objects could be pushed into you, causing serious injury.

2. Supplemental Side Air Bag Inflatable Curtains (SABICs): Located above the side windows. The trim covering the SABICs is labeled "SRS AIRBAG" or "AIRBAG."

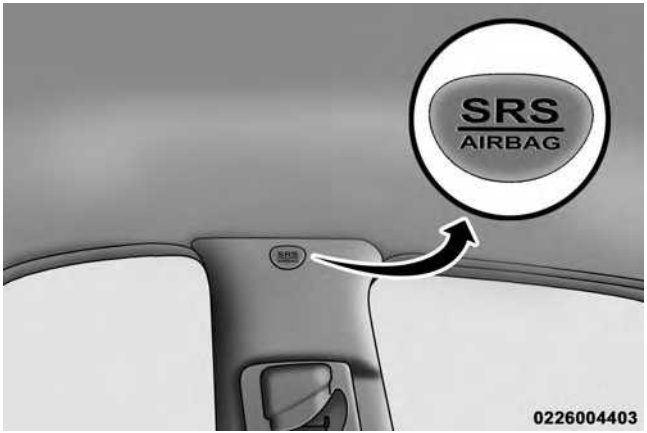

Supplemental Side Air Bag Inflatable Curtain (SABIC) Label Location

SABICs may help reduce the risk of head injury to front and rear seat outboard occupants. SABICs may reduce the risk of injuries in certain side impact and vehicle

rollover events, in addition to the injury reduction potential provided by the seat belts and body structure.

The SABICs deploy downward, covering the side windows. An inflating SABIC pushes the outside edge of the trim out of the way and covers the window. The SABICs inflate with enough force to injure you if you are not belted and seated properly, or if items are positioned in the area where the SABICs inflate. Children are at an even greater risk of injury from a deploying air bag.

The SABICs may help reduce the risk of partial or complete ejection of vehicle occupants through side windows in certain rollover or side impact events.

WARNING!

- **Your vehicle is equipped with left and right Supplemental Side Air Bag Inflatable Curtains (SABICs). Do not stack luggage or other cargo up high enough to block the deployment of the SABICs. The trim covering above the side windows where the SABIC and its deployment path are located should remain free from any obstructions.**
- **Your vehicle is equipped with SABICs. In order for the SABICs to work as intended, do not install any accessory items in your vehicle which could alter the roof. Do not add an aftermarket sunroof to your vehicle. Do not add roof racks that require permanent attachments (bolts or screws) for installation on the vehicle roof. Do not drill into the roof of the vehicle for any reason.**

The SABICs and SABs ("Side Air Bags") are designed to activate in certain side impacts and certain rollover events. The Occupant Restraint Controller ("ORC") determines whether the deployment of the Side Air Bags in a particular side impact or rollover event is appropriate, based on the severity and type of collision. Vehicle damage by itself is not a good indicator of whether or not Side Air Bags should have deployed.

Side Air Bags are a supplement to the seat belt restraint system. Side Air Bags deploy in less time than it takes to blink your eyes. Occupants, including children, who are up against or very close to Side Air Bags can be seriously injured or killed. Occupants, including children, should never lean on or sleep against the door, side windows, or area where the Side Air Bags inflate, even if they are in an infant or child restraint.

Seat belts (and child restraints where appropriate) are necessary for your protection in all collisions. They also help keep you in position, away from inflating Side Air Bags. To get the best protection from the Side Air Bags, occupants must wear their seat belts properly and sit upright with their backs against the seats. Children must be properly restrained in a child restraint or booster seat that is appropriate for the size of the child.

WARNING!

- **Side Air Bags need room to inflate. Do not lean against the door or window. Sit upright in the center of the seat.**
- **Being too close to the Side Air Bags during deployment could cause you to be severely injured or killed.**

(Continued)

WARNING! ***(Continued)***

- **Relying on the Side Air Bags alone could lead to more severe injuries in a collision. The Side Air Bags work with your seat belt to restrain you properly. In some collisions, Side Air Bags won't deploy at all. Always wear your seat belt even though you have Side Air Bags.**

NOTE: Air bag covers may not be obvious in the interior trim, but they will open during air bag deployment.

Side Impacts

In side impacts, the side impact sensors aid the ORC in determining the appropriate response to impact events. The system is calibrated to deploy the Side Air Bags on the impact side of the vehicle during impacts that require Side Air Bag occupant protection. In side impacts, the Side Air Bags deploy independently; a left side impact deploys the left Side Air Bags only and a right side impact deploys the right Side Air Bags only.

The Side Air Bags will not deploy in all side collisions, including some collisions at certain angles, or some side collisions that do not impact the area of the passenger compartment. The Side Air Bags may deploy during angled or offset frontal collisions where the Advanced Front Air Bags deploy.

Rollover Events

Side Air Bags are designed to activate in certain rollover events. The ORC determines whether the deployment of the Side Air Bags in a particular rollover event is appropriate, based on the severity and type of collision. Vehicle damage by itself is not a good indicator of whether or not Side Air Bags should have deployed.

The Side Air Bags will not deploy in all rollover events. The rollover sensing-system determines if a rollover

event may be in progress and whether deployment is appropriate. A slower-developing event may deploy the seat belt pretensioners on both sides of the vehicle. A faster-developing event may deploy the seat belt pretensioners as well as the SABs and SABICs on both sides of the vehicle. The rollover sensing-system may also deploy the seat belt pretensioners, with or without the SABs and SABICs, on both sides of the vehicle if the vehicle experiences a near rollover event.

If A Deployment Occurs

The Advanced Front Air Bags are designed to deflate immediately after deployment.

NOTE: Front and/or side air bags will not deploy in all collisions. This does not mean something is wrong with the air bag system.

If you do have a collision, which deploys the air bags, any or all of the following may occur:

- The air bag material may sometimes cause abrasions and/or skin reddening to the occupants as the air bags deploy and unfold. The abrasions are similar to friction rope burns or those you might get sliding along a carpet or gymnasium floor. They are not caused by contact with chemicals. They are not permanent and normally heal quickly. However, if you haven't healed significantly within a few days, or if you have any blistering, see your doctor immediately.
- As the air bags deflate, you may see some smoke-like particles. The particles are a normal by-product of the process that generates the non-toxic gas used for air bag inflation. These airborne particles may irritate the skin, eyes, nose, or throat. If you have skin or eye irritation, rinse the area with cool water. For nose or throat irritation, move to fresh air. If the irritation

continues, see your doctor. If these particles settle on your clothing, follow the garment manufacturer's instructions for cleaning.

Do not drive your vehicle after the air bags have deployed. If you are involved in another collision, the air bags will not be in place to protect you.

WARNING!

Deployed air bags and seat belt pretensioners cannot protect you in another collision. Have the air bags, seat belt pretensioners, and the seat belt retractor assemblies replaced by an authorized dealer immediately. Also, have the Occupant Restraint Controller System serviced as well.

NOTE:

- Air bag covers may not be obvious in the interior trim, but they will open during air bag deployment.
- After any collision, the vehicle should be taken to an authorized dealer immediately.

Enhanced Accident Response System

In the event of an impact, if the communication network remains intact, and the power remains intact, depending on the nature of the event, the ORC will determine whether to have the Enhanced Accident Response System perform the following functions:

- Cut off fuel to the engine.
- Flash hazard lights as long as the battery has power or until the ignition is placed in the "OFF" position.
- Turn on the interior lights, which remain on as long as the battery has power or until the ignition is placed in the "OFF" position.
- Unlock the doors automatically.

System Reset Procedure

In order to reset the Enhanced Accident Response System functions after an event, the ignition must be changed from ignition START or ON/RUN to ignition OFF.

Air Bag Warning Light

The air bags must be ready to inflate for your protection in a collision. The Occupant Restraint Controller (ORC) monitors the internal circuits and interconnecting wiring associated with air bag system electrical components.

The ORC monitors the readiness of the electronic parts of the air bag system whenever the ignition is in the START or ON/RUN position. If the ignition is in the OFF position or in the ACC position, the air bag system is not on and the air bags will not inflate.

The ORC contains a backup power supply system that may deploy the air bags even if the battery loses power or it becomes disconnected prior to deployment.

The ORC turns on the Air Bag Warning Light in the instrument panel for approximately four to eight seconds for a self-check when the ignition is first placed in the ON/RUN position. After the self-check, the Air Bag Warning Light will turn off. If the ORC detects a malfunction in any part of the system, it turns on the Air Bag Warning Light, either momentarily or continuously. A single chime will sound to alert you if the light comes on again after initial startup.

The ORC also includes diagnostics that will illuminate the instrument panel Air Bag Warning Light if a malfunction is detected that could affect the air bag system. The diagnostics also record the nature of the malfunction. While the air bag system is designed to be maintenance

free, if any of the following occurs, have an authorized dealer service the air bag system immediately.

- The Air Bag Warning Light does not come on during the four to eight seconds when the ignition is first placed in the ON/RUN position.
- The Air Bag Warning Light remains on after the four to eight-second interval.
- The Air Bag Warning Light comes on intermittently or remains on while driving.

NOTE: If the speedometer, tachometer, or any engine related gauges are not working, the Occupant Restraint Controller (ORC) may also be disabled. In this condition the air bags may not be ready to inflate for your protection. Have an authorized dealer service the air bag system immediately.

WARNING!

Ignoring the Air Bag Warning Light in your instrument panel could mean you won't have the air bags to protect you in a collision. If the light does not come on as a bulb check when the ignition is first placed in the on position, and stays on after you start the vehicle, or if it comes on as you drive, have an authorized dealer service the air bag system immediately.

Redundant Air Bag Warning Light

If a fault with the Air Bag Warning Light is detected, which could affect the Supplemental Restraint System ("SRS"), the Redundant Air Bag Warning Light will illuminate on the instrument panel. The Redundant Air Bag Warning Light will stay on until the fault is cleared. In addition, a single chime will sound to alert you that the Redundant Air Bag Warning Light has come on and a fault has been detected. If the Redundant Air Bag Warning Light comes on intermittently or remains on while driving have an authorized dealer service the vehicle immediately. For additional information regarding the Redundant Air Bag Warning Light refer to the "Instrument Panel" section of this manual.

Maintaining Your Air Bag System

WARNING!

- **Modifications to any part of the air bag system could cause it to fail when you need it. You could be injured if the air bag system is not there to protect you. Do not modify the components or wiring, including adding any kind of badges or stickers to the steering wheel hub trim cover or the upper right side of the instrument panel. Do not modify the front bumper, vehicle body structure, or add aftermarket side steps or running boards.**
- **It is dangerous to try to repair any part of the air bag system yourself. Be sure to tell anyone who works on your vehicle that it has an air bag system.**

(Continued)

WARNING! ***(Continued)***

- **Do not attempt to modify any part of your air bag system. The air bag may inflate accidentally or may not function properly if modifications are made. Take your vehicle to an authorized dealer for any air bag system service. If your seat, including your trim cover and cushion, needs to be serviced in any way (including removal or loosening/tightening of seat attachment bolts), take the vehicle to your authorized dealer. Only manufacturer approved seat accessories may be used. If it is necessary to modify the air bag system for persons with disabilities, contact your authorized dealer.**

Event Data Recorder (EDR)

This vehicle is equipped with an event data recorder (EDR). The main purpose of an EDR is to record, in certain crash or near crash-like situations, such as an air bag deployment or hitting a road obstacle, data that will assist in understanding how a vehicle's systems performed. The EDR is designed to record data related to vehicle dynamics and safety systems for a short period of time, typically 30 seconds or less. The EDR in this vehicle is designed to record such data as:

- How various systems in your vehicle were operating;
- Whether or not the driver and passenger safety belts were buckled/fastened;
- How far (if at all) the driver was pushing the accelerator and/or brake pedal; and,
- How fast the vehicle was traveling.

These data can help provide a better understanding of the circumstances in which crashes and injuries occur.

NOTE: EDR data are recorded by your vehicle only if a non-trivial crash situation occurs; no data are recorded by the EDR under normal driving conditions and no personal data (e.g., name, gender, age, and crash location) are recorded. However, other parties, such as law enforcement, could combine the EDR data with the type of personally identifying data routinely acquired during a crash investigation.

To read data recorded by an EDR, special equipment is required, and access to the vehicle or the EDR is needed. In addition to the vehicle manufacturer, other parties, such as law enforcement, that have the special equipment, can read the information if they have access to the vehicle or the EDR.

Child Restraints

Everyone in your vehicle needs to be buckled up at all times, including babies and children.

Every state in the United States, and every Canadian province, requires that small children ride in proper restraint systems. This is the law, and you can be prosecuted for ignoring it.

Children 12 years or younger should ride properly buckled up in a rear seat, if available. According to crash statistics, children are safer when properly restrained in the rear seats rather than in the front.

WARNING!

In a collision, an unrestrained child can become a projectile inside the vehicle. The force required to hold even an infant on your lap could become so

(Continued)

WARNING! ***(Continued)***

great that you could not hold the child, no matter how strong you are. The child and others could be badly injured. Any child riding in your vehicle should be in a proper restraint for the child's size.

There are different sizes and types of restraints for children from newborn size to the child almost large enough for an adult seat belt. Always check the child seat Owner's Manual to make sure you have the correct seat for your child. Carefully read and follow all the instructions and warnings in the child restraint Owner's Manual and on all the labels attached to the child restraint.

Before buying any restraint system, make sure that it has a label certifying that it meets all applicable Safety Standards. You should also make sure that you can install it in the vehicle where you will use it.

NOTE:

- For additional information, refer to www.seatcheck.org or call 1–866–SEATCHECK (732–8243). Canadian residents should refer to Transport Canada's website for additional information:
- www.tc.gc.ca/eng/roadsafety/safedrivers-childsafety-index-53.htm

Summary Of Recommendations For Restraining Children In Vehicles

	Child Size, Height, Weight Or Age	Recommended Type Of Child Restraint
Infants and Toddlers	Children who are two years old or younger and who have not reached the height or weight limits of their child restraint	Either an Infant Carrier or a Convertible Child Restraint, facing rearward in the rear seat of the vehicle
Small Children	Children who are at least two years old or who have out-grown the height or weight limit of their rear-facing child restraint	Forward-Facing Child Restraint with a five-point Harness, facing forward in the rear seat of the vehicle
Larger Children	Children who have out-grown their forward-facing child restraint, but are too small to properly fit the vehicle's seat belt	Belt Positioning Booster Seat and the vehicle seat belt, seated in the rear seat of the vehicle
Children Too Large for Child Restraints	Children 12 years old or younger, who have out-grown the height or weight limit of their booster seat	Vehicle Seat Belt, seated in the rear seat of the vehicle

Infants And Child Restraints

Safety experts recommend that children ride rear-facing in the vehicle until they are two years old or until they reach either the height or weight limit of their rear-facing child restraint. Two types of child restraints can be used rear-facing: infant carriers and convertible child seats.

The infant carrier is only used rear-facing in the vehicle. It is recommended for children from birth until they reach the weight or height limit of the infant carrier. Convertible child seats can be used either rear-facing or forward-facing in the vehicle. Convertible child seats often have a higher weight limit in the rear-facing direction than infant carriers do, so they can be used rear-facing by children who have outgrown their infant carrier but are still less than at least two years old. Children should remain rear-facing until they reach the highest weight or height allowed by their convertible child seat.

WARNING!

- **Never place a rear-facing child restraint in front of an air bag. A deploying passenger Advanced Front Air Bag can cause death or serious injury to a child 12 years or younger, including a child in a rear-facing child restraint.**
- **Only use a rear-facing child restraint in a vehicle with a rear seat.**

Older Children And Child Restraints

Children who are two years old or who have outgrown their rear-facing convertible child seat can ride forward-facing in the vehicle. Forward-facing child seats and convertible child seats used in the forward-facing direction are for children who are over two years old or who have outgrown the rear-facing weight or height limit of their rear-facing convertible child seat. Children should

remain in a forward-facing child seat with a harness for as long as possible, up to the highest weight or height allowed by the child seat.

All children whose weight or height is above the forward-facing limit for the child seat should use a belt-positioning booster seat until the vehicle's seat belts fit properly. If the child cannot sit with knees bent over the vehicle's seat cushion while the child's back is against the seatback, they should use a belt-positioning booster seat. The child and belt-positioning booster seat are held in the vehicle by the seat belt.

WARNING!

- **Improper installation can lead to failure of an infant or child restraint. It could come loose in a collision. The child could be badly injured or killed. Follow the child restraint manufacturer's directions exactly when installing an infant or child restraint.**

(Continued)

WARNING! ***(Continued)***

- **After a child restraint is installed in the vehicle, do not move the vehicle seat forward or rearward because it can loosen the child restraint attachments. Remove the child restraint before adjusting the vehicle seat position. When the vehicle seat has been adjusted, reinstall the child restraint.**
- **When your child restraint is not in use, secure it in the vehicle with the seat belt or LATCH anchorages, or remove it from the vehicle. Do not leave it loose in the vehicle. In a sudden stop or accident, it could strike the occupants or seatbacks and cause serious personal injury.**

Children Too Large For Booster Seats

Children who are large enough to wear the shoulder belt comfortably, and whose legs are long enough to bend over the front of the seat when their back is against the

seatback, should use the seat belt in a rear seat. Use this simple 5-step test to decide whether the child can use the vehicle's seat belt alone:

1. Can the child sit all the way back against the back of the vehicle seat?
2. Do the child's knees bend comfortably over the front of the vehicle seat – while they are still sitting all the way back?
3. Does the shoulder belt cross the child's shoulder between their neck and arm?
4. Is the lap part of the seat belt as low as possible, touching the child's thighs and not their stomach?
5. Can the child stay seated like this for the whole trip?

If the answer to any of these questions was "no," then the child still needs to use a booster seat in this vehicle. If the child is using the lap/shoulder belt, check seat belt fit periodically and make sure the seat belt buckle is latched. A child's squirming or slouching can move the seat belt out of position. If the shoulder belt contacts the face or neck, move the child closer to the center of the vehicle, or use a booster seat to position the seat belt on the child correctly.

WARNING!

Never allow a child to put the shoulder belt under an arm or behind their back. In a crash, the shoulder belt will not protect a child properly, which may result in serious injury or death. A child must always wear both the lap and shoulder portions of the seat belt correctly.

Recommendations For Attaching Child Restraints

Restraint Type	Combined Weight of the Child + Child Restraint	Use any attachment method shown with an "X" Below			
		LATCH – Lower Anchors Only	Seat Belt Only	LATCH – Lower Anchors + Top Tether Anchor	Seat Belt + Top Tether Anchor
Rear-Facing Child Restraint	Up to 65 lbs (29.5 kg)	X	X		
Rear-Facing Child Restraint	More than 65 lbs (29.5 kg)		X		
Forward-Facing Child Restraint	Up to 65 lbs (29.5 kg)			X	X
Forward-Facing Child Restraint	More than 65 lbs (29.5 kg)				X

Lower Anchors And Tethers For Children (LATCH) Restraint System

022668173

Your vehicle is equipped with the child restraint anchorage system called LATCH, which stands for Lower Anchors and Tethers for CHildren. The LATCH system has three vehicle anchor points for installing LATCH-equipped child seats. There are two lower anchorages located at the back of the seat cushion where it meets the seatback and one top tether anchorage located behind the seating position. These anchorages are used to install LATCH-equipped child seats without using the vehicle's seat belts. Some seating positions may have a top tether anchorage but no lower anchorages. In these seating positions, the seat belt must be used with the top tether anchorage to install the child restraint. Please see the following table for more information.

LATCH Positions For Installing Child Restraints In This Vehicle

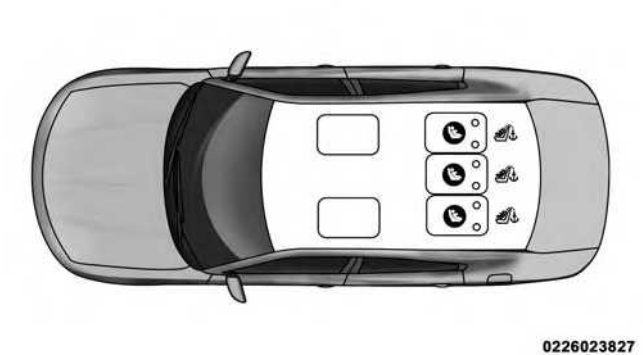

- Lower Anchorage Symbol 2 anchorages per seating position
- Top Tether Anchorage Symbol

What is the weight limit (child's weight + weight of the child restraint) for using the LATCH anchorage system to attach the child restraint?	65 lbs (29.5 kg)	Use the LATCH anchorage system until the combined weight of the child and the child restraint is 65 lbs (29.5 kg). Use the seat belt and tether anchor instead of the LATCH system once the combined weight is more than 65 lbs (29.5 kg).
Can the LATCH anchorages and the seat belt be used together to attach a rear-facing or forward-facing child restraint?	No	Do not use the seat belt when you use the LATCH anchorage system to attach a rear-facing or forward-facing child restraint.

Can two child restraints be attached using a common lower LATCH anchorage?	No	Never “share” a LATCH anchorage with two or more child restraints. If the center position does not have dedicated LATCH lower anchorages, use the seat belt to install a child seat in the center position next to a child seat using the LATCH anchorages in an outboard position.
Can the rear-facing child restraint touch the back of the front passenger seat?	Yes	The child seat may touch the back of the front passenger seat if the child restraint manufacturer also allows contact. See your child restraint owner’s manual for more information.
Can the head restraints be removed?	Yes	Center position only may be removed.

Locating LATCH Anchorages

The lower anchorages are round bars that are found at the rear of the seat cushion where it meets the seatback, below the anchorage symbols on the seatback. They are just visible when you lean into the rear seat to install the child restraint. You will easily feel them if you run your finger along the gap between the seatback and seat cushion.

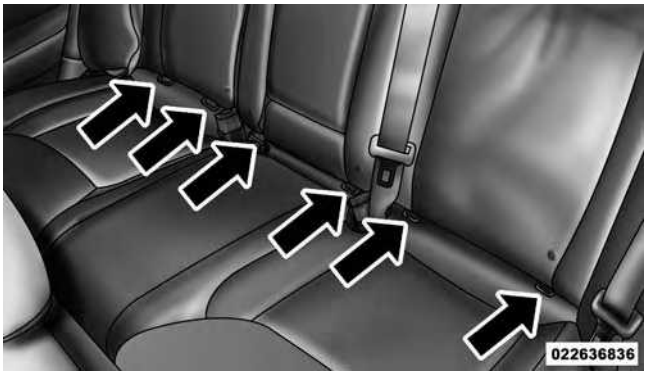

LATCH Anchorages

Locating Tether Anchorages

There are tether strap anchorages behind each rear seating position located in the panel between the rear seatback and the rear window. They are found under a plastic cover with the tether anchorage symbol on it.

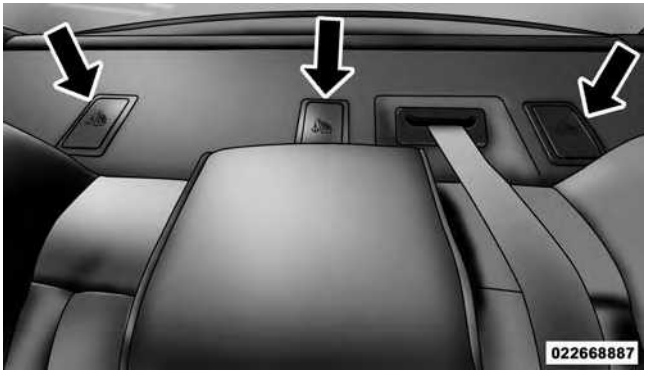

Tether Strap Anchorages

LATCH-compatible child restraint systems will be equipped with a rigid bar or a flexible strap on each side. Each will have a hook or connector to attach to the lower anchorage and a way to tighten the connection to the anchorage. Forward-facing child restraints and some rear-facing child restraints will also be equipped with a

tether strap. The tether strap will have a hook at the end to attach to the top tether anchorage and a way to tighten the strap after it is attached to the anchorage.

Center Seat LATCH

If a child restraint installed in the center position blocks the seat belt webbing or buckle for the outboard position, do not use that outboard position. If a child seat in the center position blocks the outboard LATCH anchors or seat belt, do not install a child seat in that outboard position.

WARNING!

Never use the same lower anchorage to attach more than one child restraint. Please refer to "Installing The LATCH-Compatible Child Restraint System" for typical installation instructions.

Always follow the directions of the child restraint manufacturer when installing your child restraint. Not all child restraint systems will be installed as described here.

To Install A LATCH-Compatible Child Restraint

If the selected seating position has a Switchable Automatic Locking Retractor (ALR) seat belt, stow the seat belt, following the instructions below. See the section "Installing Child Restraints Using the Vehicle Seat Belt" to check what type of seat belt each seating position has.

1. Loosen the adjusters on the lower straps and on the tether strap of the child seat so that you can more easily attach the hooks or connectors to the vehicle anchorages.
2. Place the child seat between the lower anchorages for that seating position. For some second row seats, you may need to recline the seat and/or raise the head

restraint to get a better fit. If the rear seat can be moved forward and rearward in the vehicle, you may wish to move it to its rear-most position to make room for the child seat. You may also move the front seat forward to allow more room for the child seat.

3. Attach the lower hooks or connectors of the child restraint to the lower anchorages in the selected seating position.
4. If the child restraint has a tether strap, connect it to the top tether anchorage. See the section "Installing Child Restraints Using the Top Tether Anchorage" for directions to attach a tether anchor.
5. Tighten all of the straps as you push the child restraint rearward and downward into the seat. Remove slack in the straps according to the child restraint manufacturer's instructions.
6. Test that the child restraint is installed tightly by pulling back and forth on the child seat at the belt path. It should not move more than 1 inch (25.4 mm) in any direction.

How To Stow An Unused ALR Seat Belt:

When using the LATCH attaching system to install a child restraint, stow all ALR seat belts that are not being used by other occupants or being used to secure child restraints. An unused belt could injure a child if they play with it and accidentally lock the seat belt retractor. Before installing a child restraint using the LATCH system, buckle the seat belt behind the child restraint and out of the child's reach. If the buckled seat belt interferes with the child restraint installation, instead of buckling it behind the child restraint, route the seat belt through the child restraint belt path and then buckle it. Do not lock the seat belt. Remind all children in the vehicle that the seat belts are not toys and that they should not play with them.

WARNING!

- **Improper installation of a child restraint to the LATCH anchorages can lead to failure of the restraint. The child could be badly injured or killed. Follow the child restraint manufacturer's directions exactly when installing an infant or child restraint.**
- **Child restraint anchorages are designed to withstand only those loads imposed by correctly-fitted child restraints. Under no circumstances are they to be used for adult seat belts, harnesses, or for attaching other items or equipment to the vehicle.**

Installing Child Restraints Using The Vehicle Seat Belt

The seat belts in the passenger seating positions are equipped with a Switchable Automatic Locking Retractor (ALR) that is designed to keep the lap portion of the seat belt tight around the child restraint so that it is not necessary to use a locking clip. The ALR retractor can be "switched" into a locked mode by pulling all of the webbing out of the retractor and then letting the webbing retract back into the retractor. If it is locked, the ALR will make a clicking noise while the webbing is pulled back into the retractor. For additional information on ALR, refer to the "Automatic Locking Mode" description under "Occupant Restraints."

Lap/Shoulder Belt Systems for Installing Child Restraints in this Vehicle

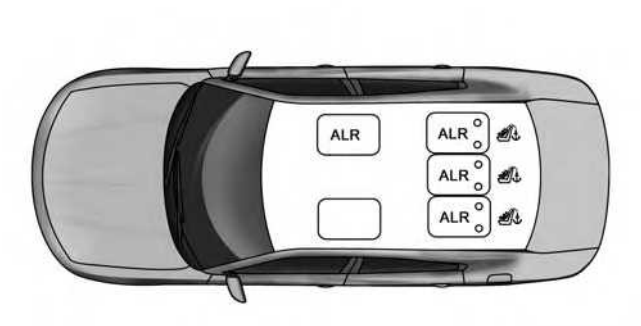

0226023829

- ALR = Switchable Automatic Locking Retractor
- Top Tether Anchorage Symbol

What is the weight limit (child's weight + weight of the child restraint) for using the Tether Anchor with the seat belt to attach a forward facing child restraint?	Weight limit of the Child Restraint	Always use the tether anchor when using the seat belt to install a forward facing child restraint, up to the recommended weight limit of the child restraint.
Can the rear-facing child restraint touch the back of the front passenger seat?	Yes	Contact between the front passenger seat and the child restraint is allowed, if the child restraint manufacturer also allows contact.
Can the head restraints be removed?	Yes	Center Only may be removed.
Can the buckle stalk be twisted to tighten the seat belt against the belt path of the child restraint?	No	Do not twist the buckle stalk in a seating position with an ALR retractor.

Installing A Child Restraint With A Switchable Automatic Locking Retractor (ALR)

1. Place the child seat in the center of the seating position. For some second row seats, you may need to recline the seat and/or raise the head restraint to get a better fit. If the rear seat can be moved forward and rearward in the vehicle, you may wish to move it to its rear-most position to make room for the child seat. You may also move the front seat forward to allow more room for the child seat.
2. Pull enough of the seat belt webbing from the retractor to pass it through the belt path of the child restraint. Do not twist the belt webbing in the belt path.
3. Slide the latch plate into the buckle until you hear a "click."
4. Pull on the webbing to make the lap portion tight against the child seat.
5. To lock the seat belt, pull down on the shoulder part of the belt until you have pulled all the seat belt webbing out of the retractor. Then, allow the webbing to retract back into the retractor. As the webbing retracts, you will hear a clicking sound. This means the seat belt is now in the Automatic Locking mode.
6. Try to pull the webbing out of the retractor. If it is locked, you should not be able to pull out any webbing. If the retractor is not locked, repeat step 5.
7. Finally, pull up on any excess webbing to tighten the lap portion around the child restraint while you push the child restraint rearward and downward into the vehicle seat.
8. If the child restraint has a top tether strap and the seating position has a top tether anchorage, connect the tether strap to the anchorage and tighten the tether

strap. See the section "Installing Child Restraints Using the Top Tether Anchorage" for directions to attach a tether anchor.

9. Test that the child restraint is installed tightly by pulling back and forth on the child seat at the belt path. It should not move more than 1 inch (25.4 mm) in any direction.

Any seat belt system will loosen with time, so check the seat belt occasionally, and pull it tight if necessary.

Installing Child Restraints Using The Top Tether Anchorage

WARNING!

Do not attach a tether strap for a rear-facing car seat to any location in front of the car seat, including the seat frame or a tether anchorage. Only attach the

(Continued)

WARNING! ***(Continued)***

tether strap of a rear-facing car seat to the tether anchorage that is approved for that seating position, located behind the top of the vehicle seat. See the section "Lower Anchors and Tethers for CHildren (LATCH) Restraint System" for the location of approved tether anchorages in your vehicle.

1. Look behind the seating position where you plan to install the child restraint to find the tether anchorage. You may need to move the seat forward to provide better access to the tether anchorage. If there is no top tether anchorage for that seating position, move the child restraint to another position in the vehicle if one is available.

2. Rotate or lift the cover to access the anchor directly behind the seat where you are placing the child restraint.

3. Route the tether strap to provide the most direct path for the strap between the anchor and the child seat. If your vehicle is equipped with adjustable rear head restraints, raise the head restraint, and where possible, route the tether strap under the head restraint and between the two posts. If not possible, lower the head restraint and pass the tether strap around the outboard side of the head restraint.

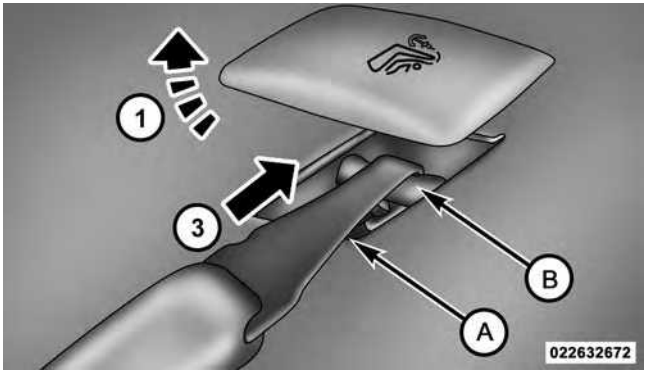

Tether Strap Mounting

1 — Cover	A — Tether Strap Hook
3 — Attaching Strap	B — Tether Anchor

4. Attach the tether strap hook of the child restraint to the top tether anchorage as shown in the diagram.

5. Remove slack in the tether strap according to the child restraint manufacturer's instructions.

WARNING!

- **An incorrectly anchored tether strap could lead to increased head motion and possible injury to the child. Use only the anchorage position directly behind the child seat to secure a child restraint top tether strap.**
- **If your vehicle is equipped with a split rear seat, make sure the tether strap does not slip into the opening between the seatbacks as you remove slack in the strap.**

Transporting Pets

Air Bags deploying in the front seat could harm your pet. An unrestrained pet will be thrown about and possibly injured, or injure a passenger during panic braking or in a collision.

Pets should be restrained in the rear seat in pet harnesses or pet carriers that are secured by seat belts.

ENGINE BREAK-IN RECOMMENDATIONS

A long break-in period is not required for the drivetrain (engine, transmission, clutch, and rear axle) in your new vehicle.

Drive moderately during the first 300 mi (500 km). After the initial 60 mi (100 km), speeds up to 50 or 55 mph (80 or 90 km/h) are desirable.

While cruising, brief full-throttle acceleration within the limits of local traffic laws contributes to a good break-in. However, wide-open throttle acceleration in low gear can be detrimental and should be avoided.

The engine oil, transmission fluid, and axle lubricant installed at the factory is high-quality and energy-conserving. Oil, fluid, and lubricant changes should be consistent with anticipated climate and conditions under which vehicle operations will occur. For the recommended viscosity and quality grades, refer to "Maintenance Procedures" in "Maintaining Your Vehicle."

CAUTION!

Never use Non-Detergent Oil or Straight Mineral Oil in the engine or damage may result.

NOTE: A new engine may consume some oil during its first few thousand miles (kilometers) of operation. This should be considered a normal part of the break-in and not interpreted as an indication of difficulty. Please check your oil level with the engine oil indicator often during the break in period. Add oil as required.

SAFETY TIPS

Transporting Passengers

NEVER TRANSPORT PASSENGERS IN THE CARGO AREA.

WARNING!

- **Do not leave children or animals inside parked vehicles in hot weather. Interior heat build-up may cause serious injury or death.**

(Continued)

WARNING! *(Continued)*

- **It is extremely dangerous to ride in a cargo area, inside or outside of a vehicle. In a collision, people riding in these areas are more likely to be seriously injured or killed.**
- **Do not allow people to ride in any area of your vehicle that is not equipped with seats and seat belts.**
- **Be sure everyone in your vehicle is in a seat and using a seat belt properly.**

Exhaust Gas

WARNING!

Exhaust gases can injure or kill. They contain carbon monoxide (CO), which is colorless and odorless. Breathing it can make you unconscious and can eventually poison you. To avoid breathing (CO), follow these safety tips:

- **Do not run the engine in a closed garage or in confined areas any longer than needed to move your vehicle in or out of the area.**
- **If you are required to drive with the trunk/liftgate/ rear doors open, make sure that all windows are closed and the climate control BLOWER switch is set at high speed. DO NOT use the recirculation mode.**

(Continued)

WARNING! *(Continued)*

- **If it is necessary to sit in a parked vehicle with the engine running, adjust your heating or cooling controls to force outside air into the vehicle. Set the blower at high speed.**

The best protection against carbon monoxide entry into the vehicle body is a properly maintained engine exhaust system.

Whenever a change is noticed in the sound of the exhaust system, when exhaust fumes can be detected inside the vehicle, or when the underside or rear of the vehicle is damaged, have a competent mechanic inspect the complete exhaust system and adjacent body areas for broken, damaged, deteriorated, or mispositioned parts. Open seams or loose connections could permit exhaust fumes to seep into the passenger compartment. In addition, inspect the exhaust system each time the vehicle is raised for lubrication or oil change. Replace as required.

Safety Checks You Should Make Inside The Vehicle

Seat Belts

Inspect the seat belt system periodically, checking for cuts, frays, and loose parts. Damaged parts must be replaced immediately. Do not disassemble or modify the system.

Front seat belt assemblies must be replaced after a collision. Rear seat belt assemblies must be replaced after a collision if they have been damaged (i.e., bent retractor, torn webbing, etc.). If there is any question regarding seat belt or retractor condition, replace the seat belt.

Air Bag Warning Light

The light should come on and remain on for four to eight seconds as a bulb check when the ignition switch is first turned ON. If the light is not lit during starting, see your authorized dealer. If the light stays on, flickers, or comes on while driving, have the system checked by an authorized dealer.

Defroster

Check operation by selecting the defrost mode and place the blower control on high speed. You should be able to feel the air directed against the windshield. See your authorized dealer for service if your defroster is inoperable.

Floor Mat Safety Information

Always use floor mats designed to fit the footwell of your vehicle. Use only floor mats that leave the pedal area unobstructed and that are firmly secured so that they cannot slip out of position and interfere with the pedals or impair safe operation of your vehicle in other ways.

WARNING!

Pedals that cannot move freely can cause loss of vehicle control and increase the risk of serious personal injury.

- **Always make sure that floor mats are properly attached to the floor mat fasteners.**

(Continued)

WARNING! *(Continued)*

- **Never place or install floor mats or other floor coverings in the vehicle that cannot be properly secured to prevent them from moving and interfering with the pedals or the ability to control the vehicle.**
- **Never put floor mats or other floor coverings on top of already installed floor mats. Additional floor mats and other coverings will reduce the size of the pedal area and interfere with the pedals.**
- **Check mounting of mats on a regular basis. Always properly reinstall and secure floor mats that have been removed for cleaning.**

(Continued)

WARNING! *(Continued)*

- **Always make sure that objects cannot fall into the driver footwell while the vehicle is moving. Objects can become trapped under the brake pedal and accelerator pedal causing a loss of vehicle control.**
- **If required, mounting posts must be properly installed, if not equipped from the factory.**

Failure to properly follow floor mat installation or mounting can cause interference with the brake pedal and accelerator pedal operation causing loss of control of the vehicle.

Periodic Safety Checks You Should Make Outside The Vehicle

Tires

Examine tires for excessive tread wear and uneven wear patterns. Check for stones, nails, glass, or other objects lodged in the tread or sidewall. Inspect the tread for cuts and cracks. Inspect sidewalls for cuts, cracks, and bulges. Check the wheel nuts for tightness. Check the tires (including spare) for proper cold inflation pressure.

Lights

Have someone observe the operation of brake lights and exterior lights while you work the controls. Check turn signal and high beam indicator lights on the instrument panel.

Door Latches

Check for proper closing, latching, and locking.

Fluid Leaks

Check area under vehicle after overnight parking for fuel, engine coolant, oil, or other fluid leaks. Also, if gasoline fumes are detected or if fuel, power steering fluid (if equipped), or brake fluid leaks are suspected, the cause should be located and corrected immediately.

UNDERSTANDING THE FEATURES OF YOUR VEHICLE

CONTENTS

■ MIRRORS 110

- □ Inside Day/Night Mirror — If Equipped 110
- □ Automatic Dimming Mirror — If Equipped . . .110
- □ Outside Mirrors 117
- □ Outside Mirrors Folding Feature — If Equipped 118
- □ Driver's Outside Automatic Dimming Mirror — If Equipped 118
- □ Outside Mirrors Approach Light — If Equipped 118
- □ Tilt Mirrors In Reverse — If Equipped 118
- □ Power Mirrors 119
- □ Heated Mirrors — If Equipped 120
- □ Illuminated Vanity Mirrors — If Equipped . . .120
- □ "Slide-On-Rod" And Extender Features Of Sun Visor 121

■ BLIND SPOT MONITORING (BSM) — IF EQUIPPED 122

- □ Rear Cross Path. 128
- □ Modes Of Operation 129
- □ General Information. 130

■ SEATS 131
- □ Power Seats — If Equipped 132
- □ Power Lumbar — If Equipped 134
- □ Heated Seats — If Equipped 135
- □ Front Ventilated Seats — If Equipped 137
- □ Manual Seats — If Equipped 138
- □ Head Restraints 140
- □ Folding Rear Seat 144

■ DRIVER MEMORY SEAT — IF EQUIPPED 146
- □ Programming The Memory Feature 147
- □ Linking And Unlinking The Remote Keyless Entry Transmitter To Memory 148
- □ Memory Position Recall 149
- □ Easy Entry/Exit Seat 149

■ TO OPEN AND CLOSE THE HOOD 150

■ LIGHTS 152
- □ Headlight Switch 152
- □ Automatic Headlights — If Equipped 153
- □ Headlights On With Wipers (Available With Automatic Headlights Only) 153
- □ Automatic High Beam Headlamp Control — If Equipped 154
- □ Headlight Time Delay 155
- □ Daytime Running Lights (DRL) — If Equipped 156
- □ Lights-On Reminder 156
- □ Fog Lights — If Equipped 156

- Multifunction Lever 157
- Turn Signals 158
- Lane Change Assist 158
- High/Low Beam Switch 158
- Flash-To-Pass 158
- Front Map/Reading Lights — If Equipped . . .159
- Courtesy Lights 160
- Ambient Light — If Equipped 160
- Interior Lights 161

■ WINDSHIELD WIPERS AND WASHERS 163
- Intermittent Wiper System 163
- Wiper Operation 163
- Windshield Washers 164
- Heated Windshield Washer Nozzles 165
- Mist Feature 165
- Headlights On With Wipers (Available With Automatic Headlights Only) 166
- Rain Sensing Wipers — If Equipped 166

■ TILT/TELESCOPING STEERING COLUMN . . .168

■ POWER TILT/TELESCOPING STEERING COLUMN — IF EQUIPPED 169

■ HEATED STEERING WHEEL — IF EQUIPPED . .170

■ ADJUSTABLE PEDALS — IF EQUIPPED 172

■ ELECTRONIC SPEED CONTROL — IF EQUIPPED 174
- To Activate 175
- To Set A Desired Speed 175

- To Deactivate 176
- To Resume Speed 176
- To Vary The Speed Setting 176
- To Accelerate For Passing 177

■ ADAPTIVE CRUISE CONTROL (ACC) — IF EQUIPPED 178

- Adaptive Cruise Control (ACC) Operation 181
- Activating Adaptive Cruise Control (ACC). . . .182
- To Activate/Deactivate. 182
- To Set A Desired ACC Speed 184
- To Cancel 184
- To Turn Off. 185
- To Resume 185
- To Vary The Speed Setting 186
- Setting The Following Distance In ACC 188
- Overtake Aid 192
- ACC Operation At Stop 192
- Adaptive Cruise Control (ACC) Menu 193
- Display Warnings And Maintenance 194
- Precautions While Driving With ACC 197
- General Information. 202
- Normal (Fixed Speed) Electronic Speed Control Mode 202

■ FORWARD COLLISION WARNING (FCW) WITH MITIGATION — IF EQUIPPED 206

- Forward Collision Warning (FCW) With Mitigation Operation 206

- Turning FCW ON Or OFF 208
- Changing FCW And Active Braking Status. . . .209
- FCW Limited Warning 209
- Service FCW Warning 210

■ LANESENSE — IF EQUIPPED 210
- LaneSense Operation 210
- Turning LaneSense ON Or OFF. 211
- LaneSense Warning Message. 212
- Changing LaneSense Status 217

■ PARKSENSE® REAR PARK ASSIST — IF EQUIPPED 218
- ParkSense® Sensors 218
- ParkSense® Warning Display 219
- ParkSense® Display. 219
- Enabling And Disabling ParkSense® 224
- Service The ParkSense® Rear Park Assist System 225
- Cleaning The ParkSense® System 225
- ParkSense® System Usage Precautions. 226

■ PARKVIEW® REAR BACK UP CAMERA — IF EQUIPPED 227

■ OVERHEAD CONSOLE 230
- Front Map/Reading Lights — If Equipped . . .230
- Courtesy Lights. 231
- Sunglasses Bin Door 232

■ GARAGE DOOR OPENER — IF EQUIPPED . . .232
- Before You Begin Programming HomeLink® . .233

- Programming A Rolling Code 234
- Programming A Non-Rolling Code 236
- Canadian/Gate Operator Programming 237
- Using HomeLink® 239
- Security 239
- Troubleshooting Tips 239
- General Information. 240

■ POWER SUNROOF — IF EQUIPPED 241
- Opening Sunroof — Express 242
- Opening Sunroof — Manual Mode 242
- Closing Sunroof — Express. 242
- Closing Sunroof — Manual Mode 242
- Pinch Protect Feature 243
- Venting Sunroof — Express 243
- Sunshade Operation. 243
- Wind Buffeting 243
- Sunroof Maintenance 244
- Ignition Off Operation 244

■ ELECTRICAL POWER OUTLETS 244

■ CUPHOLDERS 249
- Front Seat Cupholders 249
- Rear Seat Cupholders 250

■ STORAGE 251
- Glove Compartment 251
- Console Features 252
- Door Storage. 253

□ Cargo Area — Vehicles Equipped With 60/40 Split-Folding Rear Seat 253

■ REAR WINDOW FEATURES 255

□ Rear Window Defroster 255

■ LOAD LEVELING SYSTEM — IF EQUIPPED 256

MIRRORS

Inside Day/Night Mirror — If Equipped

A single ball joint mirror is provided in the vehicle. It is a twist on mirror that has a fixed position at the windshield. The mirror installs on the windshield button with a counterclockwise rotation and requires no tools for mounting. The mirror head can be adjusted up, down, left, and right for various drivers. The mirror should be adjusted to center on the view through the rear window.

Headlight glare from vehicles behind you can be reduced by moving the small control under the mirror to the night position (toward the rear of the vehicle). The mirror should be adjusted while the small control under the mirror is set in the day position (toward the windshield).

Adjusting Rearview Mirror

Automatic Dimming Mirror — If Equipped

A single ball joint mirror is provided in the vehicle. It is a twist on mirror that has a fixed position at the windshield. The mirror installs on the windshield button with a counterclockwise rotation and requires no tools for mounting. The mirror head can be adjusted up, down,

left, and right for various drivers. The mirror should be adjusted to center on the view through the rear window.

This mirror automatically adjusts for headlight glare from vehicles behind you.

NOTE:

- The Automatic Dimming Mirror feature is disabled when the vehicle is in reverse gear to improve rear view viewing.
- The Automatic Dimming Mirror feature can be turned on or off using the Uconnect® System. Refer to "Uconnect® Settings" in "Understanding Your Instrument Panel" for further information.

0304049205

Automatic Dimming Mirror

If equipped, the rearview mirror contains an ASSIST and a 9-1-1 button.

NOTE: The ASSIST and 9–1–1 features operate through the Uconnect® Access service. These buttons will only operate as long as your Uconnect® Access service is active. Refer to your "Uconnect® System supplement manual" for further information.

ASSIST Call

The ASSIST Button is used to automatically connect you to any one of the following support centers:

- Roadside Assistance – If you get a flat tire, or need a tow, just push the Assist button and you'll be connected to someone who can help. Roadside Assistance will know what vehicle you're driving and its location. Additional fees may apply for roadside Assistance.
- Uconnect® Access Customer Care – In-vehicle support for Uconnect® Access and Uconnect® Access Via Mobile features.
- Vehicle Customer Care – Total support for all other vehicle issues.

9-1-1 Call

1. Push the 9-1-1 Call button on the Rearview Mirror.

NOTE: In case the 9-1-1 Call button is pushed in error, there will be a 10 second delay before the 9-1-1 Call system initiates a call to a 9-1-1 operator. To cancel the 9-1-1 Call connection, push the 9-1-1 Call button on the Rearview Mirror or push the cancellation button on the Phone Screen. Termination of the 9-1-1 Call will turn the green LED light on the Rearview Mirror off.

2. The LED light located between the Assist and 9-1-1 buttons on the Rearview Mirror will turn green once a connection to a 9-1-1 operator has been made.

3. Once a connection between the vehicle and a 9-1-1 operator is made, the 9-1-1 Call system may transmit the following important vehicle information to a 9-1-1 operator:
   - Indication that the occupant placed a 9-1-1 Call.
   - The vehicle brand.
   - The last known GPS coordinates of the vehicle.
4. You should be able to speak with the 9-1-1 operator through the vehicle audio system to determine if additional help is needed.

NOTE: Once a connection is made between the vehicle's 9-1-1 Call system and the 9-1-1 operator, the 9-1-1 operator may be able to open a voice connection with the vehicle to determine if additional help is needed. Once the 9-1-1 operator opens a voice connection with the vehicle's 9-1-1 Call system, the operator should be able to speak with you or other vehicle occupants and hear sounds occurring in the vehicle. The vehicle's 9-1-1 Call system will attempt to remain connected with the 9-1-1 operator until the 9-1-1 operator terminates the connection.

5. The 9-1-1 operator may attempt to contact appropriate emergency responders and provide them with important vehicle information and GPS coordinates.

WARNING!

- **If anyone in the vehicle could be in danger (e.g., fire or smoke is visible, dangerous road conditions or location), do not wait for voice contact from a 9-1-1 operator. All occupants should exit the vehicle immediately and move to a safe location.**

(Continued)

WARNING! ***(Continued)***

- **The 9-1-1 Call system is embedded into the vehicle's electrical system. Do not add aftermarket electrical equipment to the vehicle's electrical system. This may prevent your vehicle from sending a signal to initiate an emergency call. To avoid interference that can cause the 9-1-1 Call system to fail, never add aftermarket equipment (e.g., two-way mobile radio, CB radio, data recorder, etc.) to your vehicle's electrical system or modify the antennas on your vehicle. IF YOUR VEHICLE LOSES BATTERY POWER FOR ANY REASON (INCLUDING DURING OR AFTER AN ACCIDENT), THE UCONNECT FEATURES, APPS AND SERVICES, AMONG OTHERS, WILL NOT OPERATE.**

(Continued)

WARNING! ***(Continued)***

- **Modifications to any part of the 9-1-1 Call system could cause the air bag system to fail when you need it. You could be injured if the air bag system is not there to help protect you.**

9-1-1 Call System Limitations

Vehicles sold in Canada and Mexico **DO NOT** have 9-1-1 Call system capabilities.

9-1-1 or other emergency line operators in Canada and Mexico may not answer or respond to 9-1-1 system calls.

If the 9-1-1 Call system detects a malfunction, any of the following may occur at the time the malfunction is detected, and at the beginning of each ignition cycle:

- The Rearview Mirror light located between the Assist and 9-1-1 buttons will continuously be illuminated red.
- The Phone Screen will display the following message "Vehicle phone requires service. Please contact your dealer."
- An In-Vehicle Audio message will state "Vehicle phone requires service. Please contact your dealer."

WARNING!

- **Ignoring the Rearview Mirror light could mean you will not have 9-1-1 Call services. If the Rearview Mirror light is illuminated, have an authorized dealer service the 9-1-1 Call system immediately.**

(Continued)

WARNING! ***(Continued)***

- **The Occupant Restraint Control module turns on the Air Bag Warning Light on the instrument panel if a malfunction in any part of the system is detected. If the Air Bag Warning Light is illuminated, the air bag system may not be working properly and the 9-1-1 system may not be able to send a signal to a 9-1-1 operator. If the Air Bag Warning Light is illuminated, have an authorized dealer service the ORC system immediately.**

Even if the 9-1-1 Call system is fully functional, factors beyond Chrysler Group LLC's control may prevent or stop the 9-1-1 Call system operation. These include, but are not limited to, the following factors:

- Delayed accessories mode is active.
- The ignition is in the OFF position.
- The vehicle's electrical systems are not intact.
- The 9-1-1 Call system software and/or hardware are damaged during a crash.
- The vehicle battery loses power or becomes disconnected during a vehicle crash.
- Wireless and/or Global Positioning Satellite signals are unavailable or obstructed.
- Equipment malfunction at the 9-1-1 operator facility.
- Operator error by the 9-1-1 operator.
- Wireless network congestion.
- Weather.
- Buildings, structures, geographic terrain, or tunnels.

NOTE: Never place anything on or near the vehicle's wireless and GPS antennas. You could prevent wireless and GPS signal reception, which can prevent your vehicle from placing an emergency call. Wireless and GPS signal reception is required for the 9-1-1 Call system to function properly.

General Information

This device complies with Part 15 of the FCC Rules. Operation is subject to the following two conditions: (1) This device may not cause harmful interference, and (2) this device must accept any interference received, including interference that may cause undesired operation.

CAUTION!

To avoid damage to the mirror during cleaning, never spray any cleaning solution directly onto the mirror. Apply the solution onto a clean cloth and wipe the mirror clean.

Outside Mirrors

To receive maximum benefit, adjust the outside mirror(s) to center on the adjacent lane of traffic and a slight overlap of the view obtained from the inside mirror.

NOTE: The passenger side convex outside mirror will give a much wider view to the rear, and especially of the lane next to your vehicle.

WARNING!

Vehicles and other objects seen in the passenger side convex mirror will look smaller and farther away than they really are. Relying too much on your passenger side convex mirror could cause you to collide with another vehicle or other object. Use your inside mirror when judging the size or distance of a vehicle seen in the passenger side convex mirror.

Outside Mirrors Folding Feature — If Equipped

Some models have outside mirrors that are hinged. The hinge allows the mirror to pivot forward and rearward to resist damage. The hinge has three detent positions: full forward, full rearward and normal.

Driver's Outside Automatic Dimming Mirror — If Equipped

The driver's outside mirror will automatically adjust for glare from vehicles behind you. This feature is controlled by the inside automatic dimming mirror and will automatically adjust for headlight glare when the inside mirror adjusts.

Outside Mirrors Approach Light — If Equipped

Driver and passenger outside mirrors equipped with approach lighting contain one LED, which is located in the upper outboard mirror glass corner. The approach light supplies illuminated entry lighting, which turns on in both mirrors when you use the Remote Keyless Entry (RKE) transmitter or open any door. This LED shines outward to illuminate the front and rear door handles. It also shines downward to illuminate the area in front of the doors.

Tilt Mirrors In Reverse — If Equipped

Tilt Mirrors in Reverse provides automatic outside mirror positioning which will aid the driver's view of the ground rearward of the front doors. The outside mirrors will move slightly downward from the present position when the vehicle is shifted into REVERSE. The outside mirrors will then return to the original position when the vehicle is shifted out of the REVERSE position. Each stored memory setting will have an associated Tilt Mirrors in Reverse position.

NOTE: The Tilt Mirrors in Reverse feature is not turned on when delivered from the factory. The Tilt Mirrors in Reverse feature can be turned on and off using the Uconnect® System. Refer to "Uconnect® Settings" in "Understanding Your Instrument Panel" for further information.

Power Mirrors

The power mirror controls are located on the driver's door trim panel.

Power Mirror Control

The power mirror controls consist of mirror select buttons and a four-way mirror control switch. To adjust a mirror, push either the L (left) or R (right) button to select the mirror that you want to adjust.

NOTE: A light in the select button will illuminate indicating the mirror is activated and can be adjusted.

Using the mirror control switch, push on any of the four arrows for the direction that you want the mirror to move.

Power mirror preselected positions can be controlled by the optional Memory Seat Feature. Refer to "Driver Memory Seat" in "Understanding The Features Of Your Vehicle" for further information.

Heated Mirrors — If Equipped

These mirrors are heated to melt frost or ice. This feature can be activated whenever you turn on the rear window defroster (if equipped). Refer to "Rear Window Features" in "Understanding The Features Of Your Vehicle" for further information.

Illuminated Vanity Mirrors — If Equipped

An illuminated vanity mirror is located on the sun visor. To use the mirror, rotate the sun visor downward and swing the mirror cover upward. The light turns on automatically. Closing the mirror cover turns off the light.

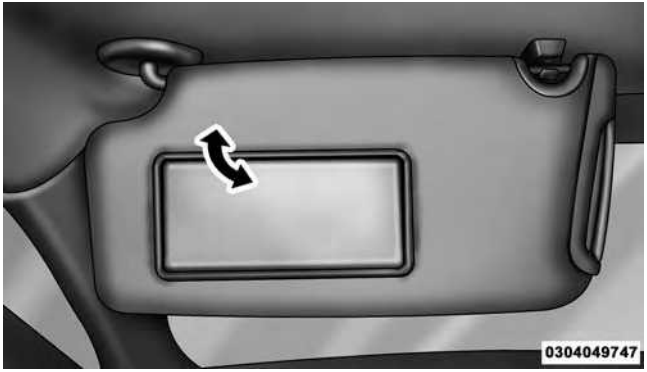

Illuminated Vanity Mirror

"Slide-On-Rod" And Extender Features Of Sun Visor

To use the "Slide-On-Rod" feature of the sun visor, rotate the sun visor downward and swing the sun visor so it is parallel to the side window, grab the sun visor and pull rearwards until the sun visor is in the desired position. To use the extender feature of the sun visor, grab the extender which is located at the rear of the visor and pull rearward.

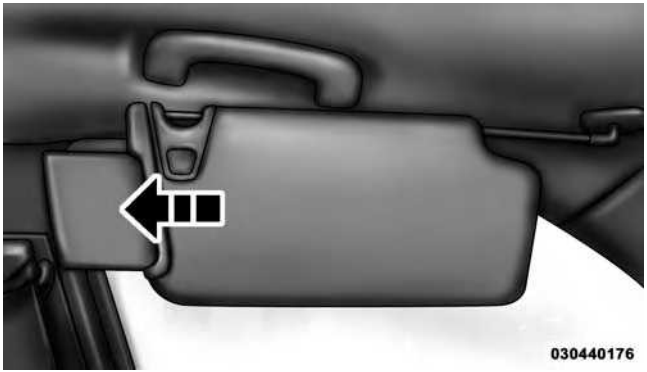

Slide-On-Rod Feature

BLIND SPOT MONITORING (BSM) — IF EQUIPPED

The Blind Spot Monitoring (BSM) system uses two radar-based sensors, located inside the rear bumper fascia, to detect highway licensable vehicles (automobiles, trucks, motorcycles, etc.) that enter the blind spot zones from the rear/front/side of the vehicle.

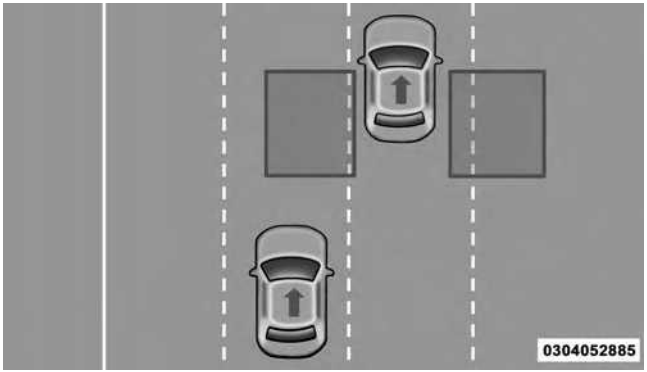

Rear Detection Zones

When the vehicle is started, the BSM warning light will momentarily illuminate in both outside rear view mirrors to let the driver know that the system is operational.

The BSM system sensors operate when the vehicle is in any forward gear or REVERSE and enters stand-by mode when the vehicle is in PARK.

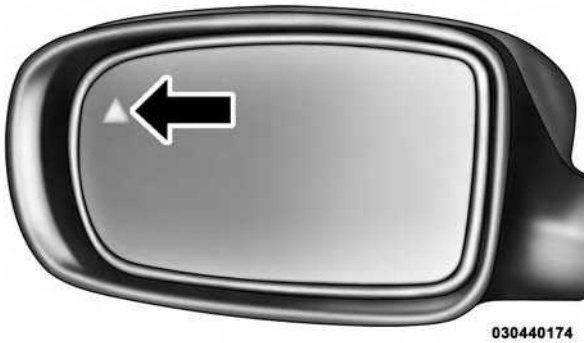

BSM Warning Light

The BSM detection zone covers approximately one lane width on both sides of the vehicle 12 ft (3.8 m). The zone length starts at the outside rear view mirror and extends approximately 10 ft (3 m) beyond the rear bumper of the vehicle. The BSM system monitors the detection zones on both sides of the vehicle when the vehicle speed reaches approximately 6 mph (10 km/h) or higher and will alert the driver of vehicles in these areas.

NOTE:

- The BSM system does NOT alert the driver about rapidly approaching vehicles that are outside the detection zones.
- The BSM system detection zone DOES NOT change if your vehicle is towing a trailer. Therefore, visually verify the adjacent lane is clear for both your vehicle and trailer before making a lane change. If the trailer or other object (i.e., bicycle, sports equipment) extends beyond the side of your vehicle, this may result in the BSM warning light remaining illuminated the entire time the vehicle is in a forward gear.

The area on the rear fascia where the radar sensors are located must remain free of snow, ice, and dirt/road

contamination so that the BSM system can function properly. Do not block the area of the rear fascia where the radar sensors are located with foreign objects (bumper stickers, bicycle racks, etc.).

The BSM system notifies the driver of objects in the detection zones by illuminating the BSM warning light located in the outside mirrors in addition to sounding an audible (chime) alert and reducing the radio volume. Refer to “Modes Of Operation” for further information.

The BSM system monitors the detection zone from three different entry points (side, rear, front) while driving to see if an alert is necessary. The BSM system will issue an alert during these types of zone entries.

Entering From The Side

Vehicles that move into your adjacent lanes from either side of the vehicle.

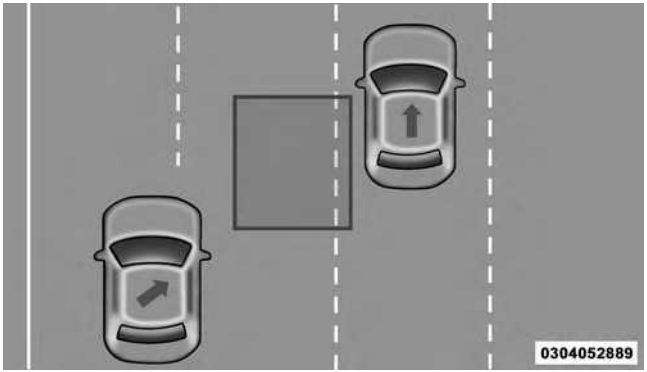

Side Monitoring

Entering From The Rear

Vehicles that come up from behind your vehicle on either side and enter the rear detection zone with a relative speed of less than 30 mph (48 km/h).

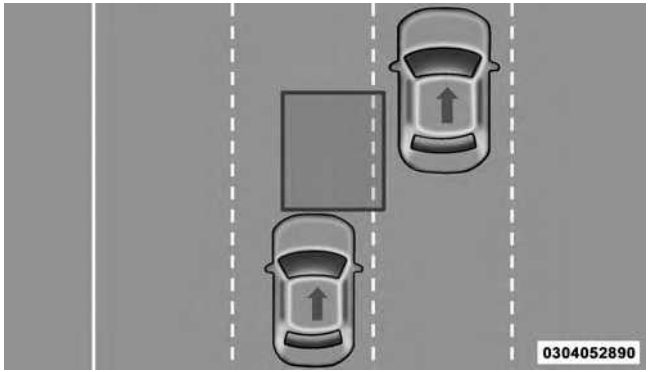

Rear Monitoring

Overtaking Traffic

If you pass another vehicle slowly (with a relative speed of less than 15 mph (24 km/h) and the vehicle remains in the blind spot for approximately 1.5 seconds, the warning light will be illuminated. If the difference in speed between the two vehicles is greater than 15 mph (24 km/h), the warning light will not illuminate.

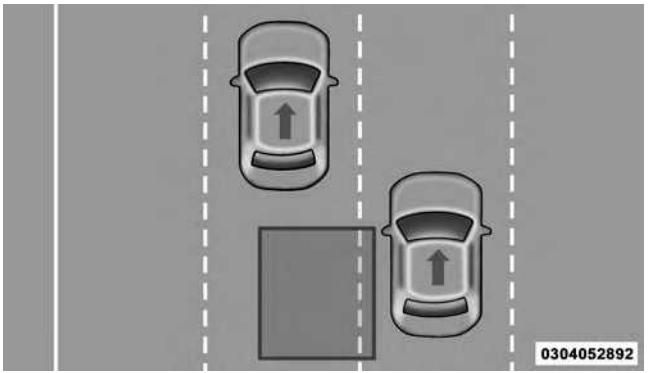

Overtaking/Approaching

The BSM system is designed not to issue an alert on stationary objects such as guardrails, posts, walls, foliage, berms, etc. However, occasionally the system may alert on such objects. This is normal operation and your vehicle does not require service.

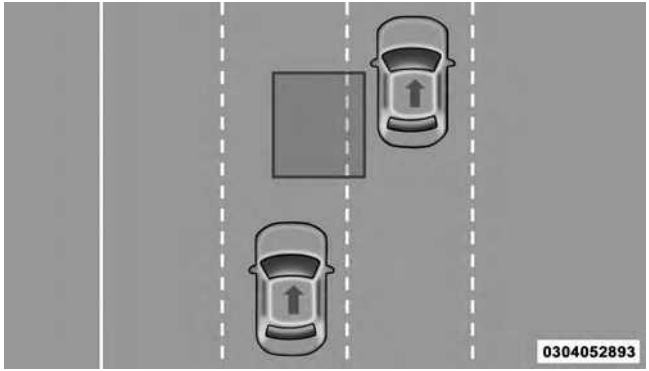

Overtaking/Passing

The BSM system will not alert you of objects that are traveling in the opposite direction of the vehicle in adjacent lanes.

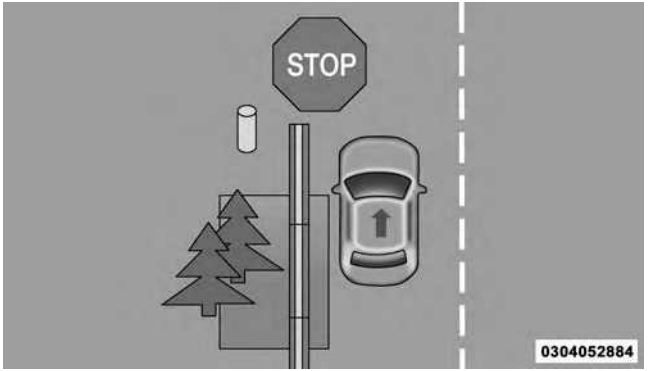

Stationary Objects

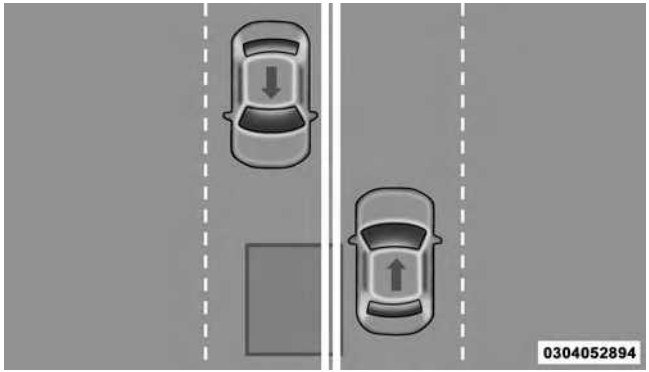

Opposing Traffic

WARNING!

The Blind Spot Monitoring system is only an aid to help detect objects in the blind spot zones. The BSM system is not designed to detect pedestrians, bicyclists, or animals. Even if your vehicle is equipped with the BSM system, always check your vehicle's mirrors, glance over your shoulder, and use your turn signal before changing lanes. Failure to do so can result in serious injury or death.

Rear Cross Path

The Rear Cross Path (RCP) feature is intended to aid the drivers when backing out of parking spaces where their vision of oncoming vehicles may be blocked. Proceed slowly and cautiously out of the parking space until the rear end of the vehicle is exposed. The RCP system will then have a clear view of the cross traffic and if an oncoming vehicle is detected, alert the driver.

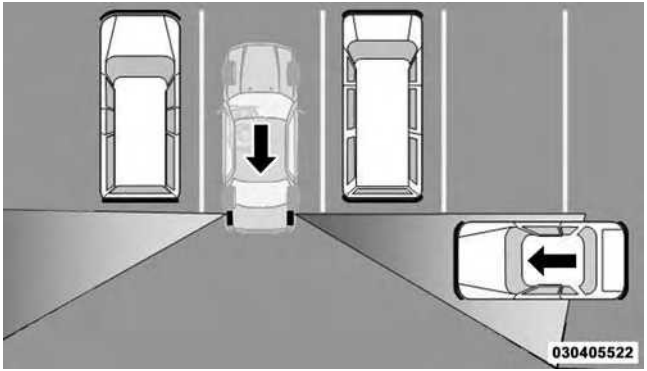

RCP Detection Zones

RCP monitors the rear detection zones on both sides of the vehicle, for objects that are moving toward the side of the vehicle with a minimum speed of approximately 3 mph (5 km/h), to objects moving a maximum of approximately 20 mph (32 km/h), such as in parking lot situations.

NOTE: In a parking lot situation, oncoming vehicles can be obscured by vehicles parked on either side. If the sensors are blocked by other structures or vehicles, the system will not be able to alert the driver.

When RCP is on and the vehicle is in REVERSE, the driver is alerted using both the visual and audible alarms, including reducing the radio volume.

WARNING!

RCP is not a Back Up Aid system. It is intended to be used to help a driver detect an oncoming vehicle in a parking lot situation. Drivers must be careful when backing up, even when using RCP. Always check carefully behind your vehicle, look behind you, and be sure to check for pedestrians, animals, other vehicles, obstructions, and blind spots before backing up. Failure to do so can result in serious injury or death.

Modes Of Operation

Three selectable modes of operation are available in the Uconnect® System. Refer to "Uconnect® Settings/ Customer Programmable Features" in "Understanding Your Instrument Panel" for further information.

Blind Spot Alert Lights Only

When operating in Blind Spot Alert mode, the BSM system will provide a visual alert in the appropriate side view mirror based on a detected object. However, when the system is operating in Rear Cross Path mode, the system will respond with both visual and audible alerts when a detected object is present. Whenever an audible alert is requested, the radio volume is reduced.

Blind Spot Alert Lights/Chime

When operating in Blind Spot Alert Lights/Chime mode, the BSM system will provide a visual alert in the appropriate side view mirror based on a detected object. If the

turn signal is then activated, and it corresponds to an alert present on that side of the vehicle, an audible chime will also be sounded. Whenever a turn signal and detected object are present on the same side at the same time, both the visual and audio alerts will be issued. In addition to the audible alert the radio (if on) volume will be reduced.

NOTE:

- Whenever an audible alert is requested by the BSM system, the radio volume is reduced.
- If the hazard flashers are on, the system will request the appropriate visual alert only.

When the system is in RCP, the system shall respond with both visual and audible alerts when a detected object is present. Whenever an audible alert is requested, the radio volume is reduced. Turn/hazard signal status is ignored; the RCP state always requests the chime.

Blind Spot Alert Off

When the BSM system is turned off there will be no visual or audible alerts from either the BSM or RCP systems.

NOTE: The BSM system will store the current operating mode when the vehicle is shut off. Each time the vehicle is started the previously stored mode will be recalled and used.

General Information

This vehicle has systems that operate on radio frequency that comply with Part 15 of the Federal Communications Commission (FCC) rules and with Industry Canada Standards RSS- GEN/210/220/310.

Operation is subject to the following two conditions:

1. The device may not cause harmful interference.

2. The device must accept any interference received, including interference that may cause undesired operation of the device.

Changes or modifications to any of these systems by other than an authorized service facility could void authorization to use this equipment.

SEATS

Seats are a part of the Occupant Restraint System of the vehicle.

WARNING!

- **It is dangerous to ride in a cargo area, inside or outside of a vehicle. In a collision, people riding in these areas are more likely to be seriously injured or killed.**
- **Do not allow people to ride in any area of your vehicle that is not equipped with seats and seat belts. In a collision, people riding in these areas are more likely to be seriously injured or killed.**
- **Be sure everyone in your vehicle is in a seat and using a seat belt properly.**

Power Seats — If Equipped

On models equipped with power seats, the switch is located on the outboard side of the seat near the floor. Use this switch to move the driver's seat up or down, forward or rearward or to recline the seatback.

NOTE: The passenger's seat will move up or down, forward or rearward.

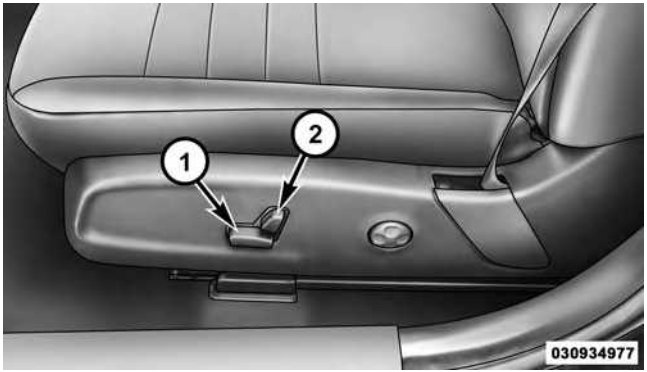

Power Seat Switches

1 — Seat Control
2 — Seatback Control

Adjusting The Seat Forward Or Rearward

The seat can be adjusted both forward and rearward. Push the seat switch forward or rearward, the seat will move in the direction of the switch. Release the switch when the desired position has been reached.

Adjusting The Seat Up Or Down

The height of the seats can be adjusted up or down. Pull upward or push downward on the seat switch, the seat will move in the direction of the switch. Release the switch when the desired position is reached.

Tilting The Seat Up Or Down

The angle of the seat cushion can be adjusted in four directions. Pull upward or push downward on the front or rear of the seat switch, the front or rear of the seat cushion will move in the direction of the switch. Release the switch when the desired position has been reached.

Reclining The Seatback

The angle of the seatback can be adjusted forward or rearward. Push the seatback switch forward or rearward, the seat will move in the direction of the switch. Release the switch when the desired position is reached.

WARNING!

- **Adjusting a seat while driving may be dangerous. Moving a seat while driving could result in loss of control which could cause a collision and serious injury or death.**
- **Seats should be adjusted before fastening the seat belts and while the vehicle is parked. Serious injury or death could result from a poorly adjusted seat belt.**

(Continued)

WARNING! *(Continued)*

- **Do not ride with the seatback reclined so that the shoulder belt is no longer resting against your chest. In a collision you could slide under the seat belt, which could result in serious injury or death.**

CAUTION!

Do not place any article under a power seat or impede its ability to move as it may cause damage to the seat controls. Seat travel may become limited if movement is stopped by an obstruction in the seat's path.

Power Lumbar — If Equipped

Vehicles equipped with power driver or passenger seats may also be equipped with power lumbar. The power lumbar switch is located on the outboard side of the power seat. Push the switch forward or rearward to increase or decrease the lumbar support. Push the switch upward or downward to raise or lower the lumbar support.

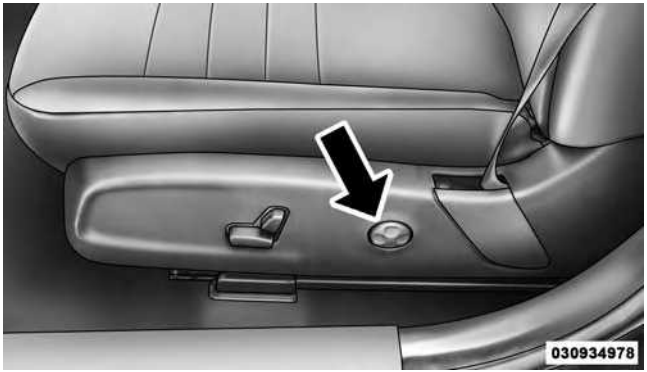

Power Lumbar Switch

Heated Seats — If Equipped

On some models, the front and rear seats may be equipped with heaters in both the seat cushions and seatbacks.

The front driver and passenger heated seats are operated using the Uconnect® System.

WARNING!

- **Persons who are unable to feel pain to the skin because of advanced age, chronic illness, diabetes, spinal cord injury, medication, alcohol use, exhaustion or other physical condition must exercise care when using the seat heater. It may cause burns even at low temperatures, especially if used for long periods of time.**

(Continued)

WARNING! *(Continued)*

- **Do not place anything on the seat or seatback that insulates against heat, such as a blanket or cushion. This may cause the seat heater to overheat. Sitting in a seat that has been overheated could cause serious burns due to the increased surface temperature of the seat.**

Front Heated Seats

The front heated seats control buttons are located within the climate or controls screen of the touchscreen.

You can choose from HI, LO or OFF heat settings. The indicator lights in each switch indicate the level of heat in use. Two indicator lights will illuminate for HI, one for LO and none for OFF.

- Press the heated seat button once to turn the HI setting ON.

- Press the heated seat button a second time to turn the LO setting ON.
- Press the heated seat button a third time to turn the heating elements OFF.

If the HI-level setting is selected, the system will automatically switch to LO-level after approximately 60 minutes of continuous operation. At that time, the display will change from HI to LO, indicating the change. The LO-level setting will turn OFF automatically after approximately 45 minutes.

NOTE:

- Once a heat setting is selected, heat will be felt within two to five minutes.
- The engine must be running for the heated seats to operate.

Vehicles Equipped With Remote Start

On models that are equipped with remote start, the heated seats can be programed to come on during a remote start.

This feature can be programmed through the Uconnect® system. Refer to "Uconnect® Settings" in "Understanding Your Instrument Panel" for further information.

Rear Heated Seats

On some models, the two outboard seats are equipped with heated seats. The heated seat switches for these seats are located on the rear of the center console. There are two heated seat switches that allow the rear passengers to operate the seats independently.

You can choose from HI, LO or OFF heat settings. The indicator lights in each switch indicate the level of heat in use. Two indicator lights will illuminate for HI, one for LO and none for OFF.

- Push the heated seat button once to select HI-level heating.
- Push the heated seat button a second time to select LO-level heating.
- Push the heated seat button a third time to turn the heating elements OFF.

NOTE:

- Once a heat setting is selected, heat will be felt within two to five minutes.
- The engine must be running for the heated seats to operate.

When the HI-level setting is selected, the heater will provide a boosted heat level during the first four minutes of operation. Then, the heat output will drop to the normal HI-level. If the HI-level setting is selected, the system will automatically switch to LO-level after approximately 60 minutes of continuous operation. At that time, the number of illuminated LEDs changes from two to one, indicating the change. The LO-level setting will turn OFF automatically after approximately 45 minutes.

Front Ventilated Seats — If Equipped

Located in the seat cushion and seat back are small fans that draw the air from the passenger compartment and move air through fine perforations in the seat cover to help keep the driver and front passenger cooler in higher ambient temperatures. The fans operate at two speeds, HI and LO.

The front ventilated seats control buttons are located within the Uconnect® system. You can gain access to the control buttons through the climate screen or the controls screen.

- Press the ventilated seat button once to choose HI.

- Press the ventilated seat button a second time to choose LO.
- Press the ventilated seat button a third time to turn the ventilated seat OFF.

NOTE: The engine must be running for the ventilated seats to operate.

Vehicles Equipped With Remote Start

On models that are equipped with remote start, the ventilated seats can be programed to come on during a remote start.

This feature can be programmed through the Uconnect® system. Refer to "Uconnect® Settings" in "Understanding Your Instrument Panel" for further information.

Manual Seats — If Equipped

Forward Or Rearward Adjustment

The adjusting bar is at the front of the seat, near the floor. Pull the bar upward to move the seat forward or rearward. Release the bar once the seat is in the position desired. Using body pressure, move forward and rearward on the seat to be sure that the seat adjusters have latched.

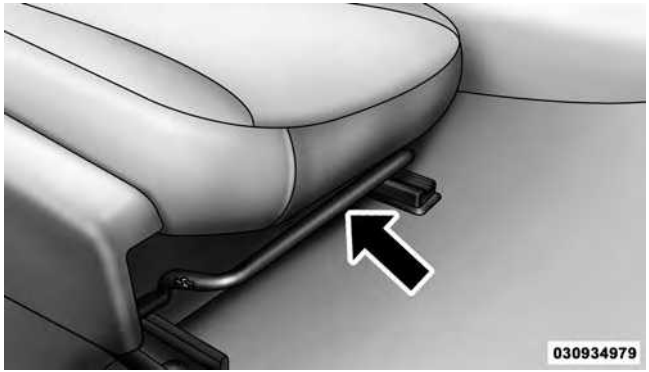

Manual Seat Adjusting Bar

WARNING!

Adjusting a seat while the vehicle is moving is dangerous. The sudden movement of the seat could cause you to lose control. The seat belt might not be properly adjusted and you could be injured. Adjust the seat only while the vehicle is parked.

Recline

To adjust the seatback, lift the lever located on the outboard side of the seat, lean back to the desired position and release the lever. To return the seatback, lift the lever, lean forward and release the lever.

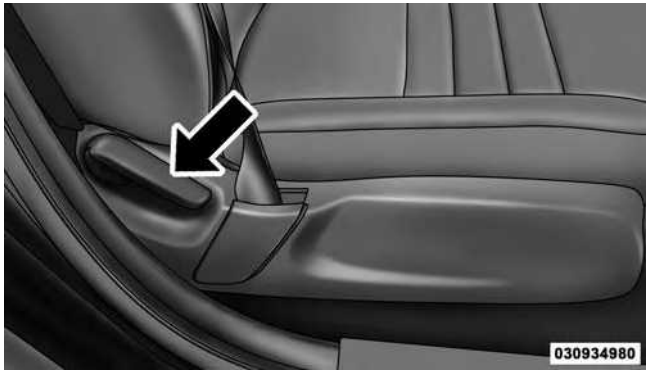

Manual Recline Lever

WARNING!

Do not ride with the seatback reclined so that the shoulder belt is no longer resting against your chest. In a collision you could slide under the seat belt, which could result in serious injury or death.

Head Restraints

Head restraints are designed to reduce the risk of injury by restricting head movement in the event of a rear impact. Head restraints should be adjusted so that the top of the head restraint is located above the top of your ear.

WARNING!

The head restraints for all occupants must be properly adjusted prior to operating the vehicle or occupying a seat. Head restraints should never be adjusted while the vehicle is in motion. Driving a vehicle with the head restraints improperly adjusted or removed could cause serious injury or death in the event of a collision.

Reactive Head Restraints — Front Seats

The front driver and passenger seats are equipped with Reactive Head Restraints (RHR). In the event of a rear impact the RHRs will automatically extend forward minimizing the gap between the back of the occupants head and the RHR.

The RHRs will automatically return to their normal position following a rear impact. If the RHRs do not return to their normal position see your authorized dealer immediately.

To raise the head restraint, pull upward on the head restraint. To lower the head restraint, push the adjustment button located at the base of the head restraint and push downward on the head restraint.

NOTE: To remove the head restraint, raise it as far as it can go then push the release button and the adjustment button at the base of each post while pulling the head restraint up. To reinstall the head restraint, put the head restraint posts into the holes and push downward. Then adjust the head restraint to the appropriate height.

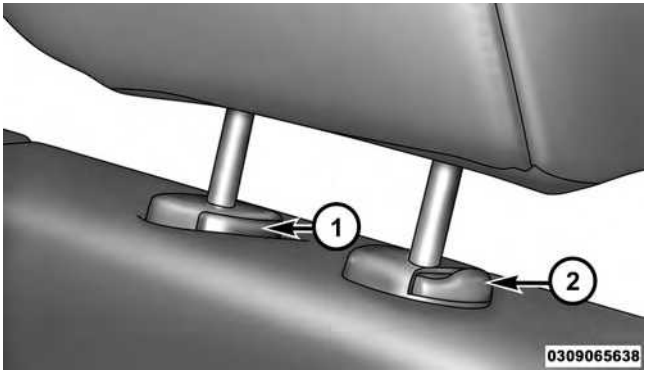

Adjustment Button

1 — Release Button
2 — Adjustment Button

WARNING!

- **A loose head restraint thrown forward in a collision or hard stop could cause serious injury or death to occupants of the vehicle. Always securely stow removed head restraints in a location outside the occupant compartment.**
- **ALL the head restraints MUST be reinstalled in the vehicle to properly protect the occupants. Follow the re-installation instructions above prior to operating the vehicle or occupying a seat.**
- **Do not place items over the top of the Reactive Head Restraint, such as coats, seat covers or portable DVD players. These items may interfere with the operation of the Reactive Head Restraint in the event of a collision and could result in serious injury or death.**

Rear Head Restraints

The center head restraint has two adjustable positions, up or down. When the center seat is being occupied the head restraint should be in the raised position. When there are no occupants in the center seat the head restraint can be lowered for maximum visibility for the driver.

To raise the head restraint, pull upward on the head restraint. To lower the head restraint, push the adjustment button located at the base of the head restraint and push downward on the head restraint.

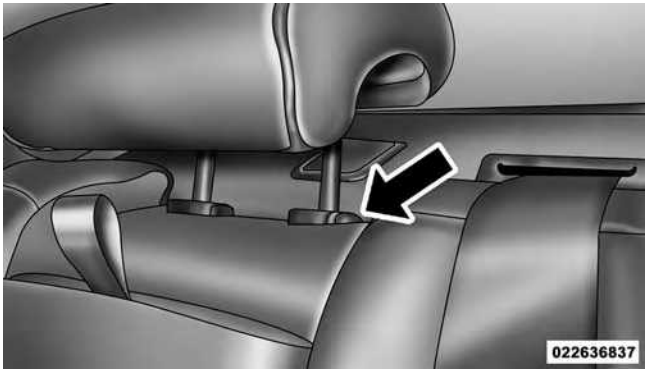

Adjustment Button

NOTE:

- The head restraint should only be removed by qualified technicians, for service purposes only. If the center rear head restraints requires removal, see your authorized dealer.
- The outboard head restraints are not adjustable.

Folding Rear Seat

The rear seatbacks can be folded forward to provide an additional storage area. To fold the rear seatback, pull on the loops located on the upper seatback.

NOTE: These loops can be tucked away when not in use.

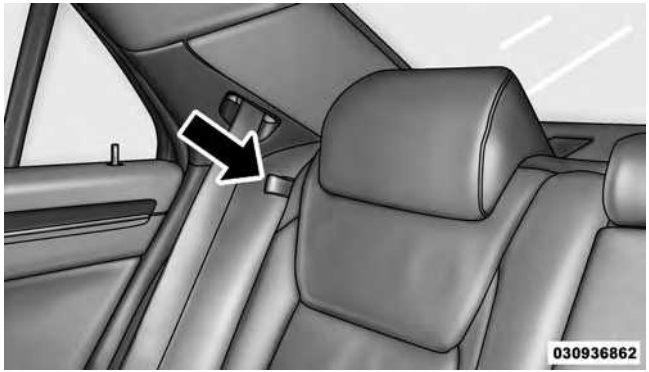

Rear Seatback Loop

After releasing the seatback, it can be folded forward.

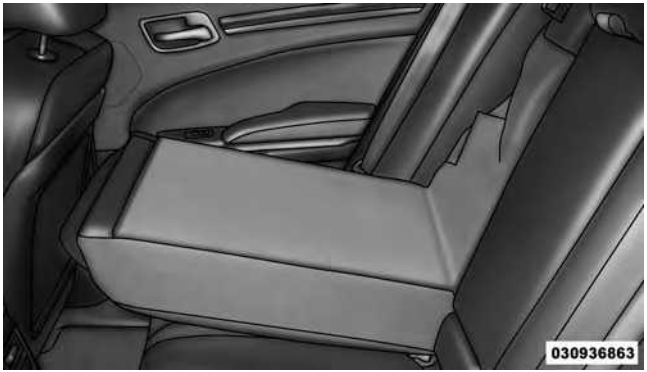

Folded Rear Seatback

When the seatback is folded to the upright position, make sure it is latched by strongly pulling on the top of the seatback above the seat strap.

WARNING!

- **Be certain that the seatback is securely locked into position. If the seatback is not securely locked into position, the seat will not provide the proper stability for child seats and/or passengers. An improperly latched seat could cause serious injury.**
- **The cargo area in the rear of the vehicle (with the rear seatbacks in the locked-up or folded down position) should not be used as a play area by children when the vehicle is in motion. They could be seriously injured in a collision. Children should be seated and using the proper restraint system.**

DRIVER MEMORY SEAT — IF EQUIPPED

This feature allows the driver to store up to two different memory profiles for easy recall through a memory switch. Each memory profile contains desired position settings for the driver seat, side mirrors, adjustable pedals (if equipped), and power tilt and telescopic steering column (if equipped) and a set of desired radio station presets. Your Remote Keyless Entry (RKE) transmitter can also be programmed to recall the same positions when the UNLOCK button is pushed.

NOTE: If your vehicle is equipped with two RKE transmitters, one RKE transmitter can be linked to memory position 1 and the other transmitter can be linked to memory position 2.

The memory seat switch is located on the driver's door trim panel. The switch consists of three buttons: The (S) button, which is used to activate the memory save function and the (1) and (2) buttons which are used to recall either of two pre-programmed memory profiles.

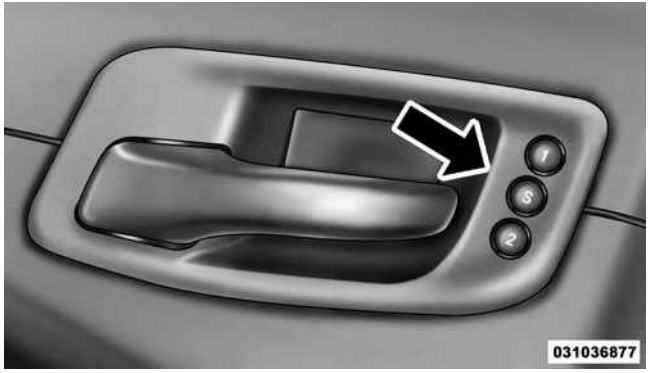

Memory Seat Switches

Programming The Memory Feature

NOTE: Saving a new memory profile will erase an existing profile from memory.

To create a new memory profile, perform the following:

1. Place the vehicles ignition to the ON/RUN position.
2. Adjust all memory profile settings to desired preferences (i.e., seat, side mirror, adjustable pedals [if equipped], power tilt and telescopic steering column [if equipped], and radio station presets).
3. Push and release the SET (S) button on the memory switch.
4. Within five seconds, push and release the MEMORY button 1 or 2. The Drivers Information Display (DID) will display which memory position has been set.

NOTE:

- Memory profiles can be set without the vehicle in PARK, but the vehicle must be in PARK to recall a memory profile.
- To set a memory profile to your RKE transmitter, refer to "Linking And Unlinking The Remote Keyless Entry Transmitter To Memory" in this section.

Linking And Unlinking The Remote Keyless Entry Transmitter To Memory

Your RKE transmitters can be programmed to recall one of two pre-programmed memory profiles by pushing the UNLOCK button on the RKE transmitter.

NOTE: Before programming your RKE transmitters you must select the "Memory To FOB" or "Personal Settings Linked To Fob" feature through the Uconnect® system screen. Refer to "Uconnect® Settings" in "Understanding Your Instrument Panel" for further information.

To program your RKE transmitters, perform the following:

1. Place the vehicles ignition to the OFF position.
2. Select desired memory profile (1) or (2). The system will recall any stored settings for this profile. Wait for the system to complete the memory recall before continuing to Step 3.

NOTE: If a memory profile has not already been set, refer to "Programming The Memory Feature" in this section for instructions on how to set a memory profile.

3. Once the profile has been recalled, push and release the SET (S) button on the memory switch, then push and release button (1) or (2) accordingly. "Memory Profile Set" (1 or 2) will display in the Drivers Information Display (DID).
4. Push and release the LOCK button on the RKE transmitter within 10 seconds.

NOTE: Your RKE transmitters can be unlinked from your memory settings by pushing the SET (S) button, and within 10 seconds, followed by pushing the UNLOCK button on the RKE transmitter.

Memory Position Recall

NOTE: The vehicle must be in PARK to recall memory positions. If a recall is attempted when the vehicle is not in PARK, a message will display in the Drivers Information Display (DID).

To recall the memory settings for driver 1, push MEMORY button number 1 on the driver's door or the UNLOCK button on the RKE transmitter linked to memory position 1.

NOTE: If the vehicle is equipped with Passive Entry, the memory settings will be recalled with a Passive Entry Unlock into the driver's door using the Key Fob linked to position 1.

To recall the memory setting for driver 2, push MEMORY button number 2 on the driver's door or the UNLOCK button on the RKE transmitter linked to memory position 2.

NOTE: If the vehicle is equipped with Passive Entry, the memory settings will be recalled with a Passive Entry Unlock into the driver's door using the Key Fob linked to position 2.

A recall can be cancelled by pushing any of the MEMORY buttons (S, 1, or 2) on the driver's door during a recall. When a recall is cancelled, the driver's seat, adjustable pedals (if equipped), and power tilt and telescopic steering column (if equipped) stop moving. A delay of one second will occur before another recall can be selected.

Easy Entry/Exit Seat

This feature provides automatic driver seat positioning to enhance driver mobility when entering and exiting the vehicle.

The distance the driver seat moves depends on where you have the driver seat positioned when you cycle the vehicles ignition to the OFF position.

- When you cycle the vehicles ignition to the OFF position, the driver seat will move about 2.4 in (60 mm) rearward if the driver seat position is greater than or equal to 2.7 in (67.7 mm) forward of the rear stop. The seat will return to its previously set position when you cycle the vehicles ignition to the ACC or RUN position.
- The Easy Entry/Easy Exit feature is disabled when the driver seat position is less than 0.9 in (22.7 mm) forward of the rear stop. At this position, there is no benefit to the driver by moving the seat for Easy Exit or Easy Entry.

Each stored memory setting will have an associated Easy Entry and Easy Exit position.

NOTE: The Easy Entry/Exit feature is not enabled when the vehicle is delivered from the factory. The Easy Entry/Exit feature is enabled (or later disabled) through the programmable features in the Uconnect® system. Refer to "Uconnect® Settings/Customer Programmable Features" in "Understanding Your Instrument Panel" for further information.

TO OPEN AND CLOSE THE HOOD

Two latches must be released to open the hood.

1. Pull the hood release lever located under the left side of the instrument panel.

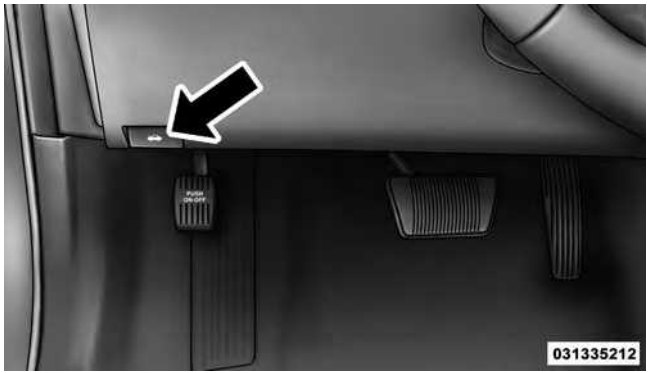

Hood Release Lever

2. Move to the front of the vehicle.
3. Reach under the center front edge of the hood and push and hold the safety catch lever to the left.

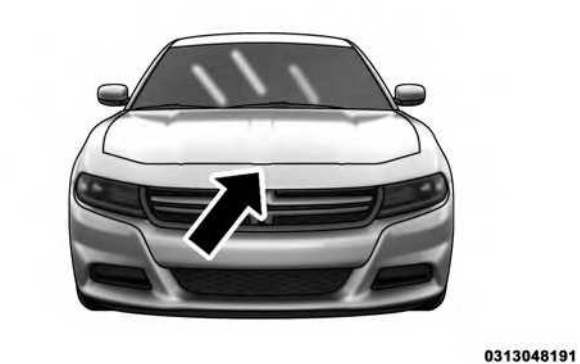

Safety Catch Lever Location

4. Lift the hood upward to the open position.

CAUTION!

To prevent possible damage, do not slam the hood to close it. Lower the hood until it is open approximately 6 inches (15 cm), and then drop it. This should secure both latches. Never drive your vehicle unless the hood is fully closed, with both latches engaged.

WARNING!

Be sure the hood is fully latched before driving your vehicle. If the hood is not fully latched, it could open when the vehicle is in motion and block your vision. Failure to follow this warning could result in serious injury or death.

LIGHTS

Headlight Switch

The headlight switch is located on the left side of the instrument panel. This switch controls the operation of the headlights, parking lights, instrument panel lights, instrument panel light dimming, interior lights and fog lights.

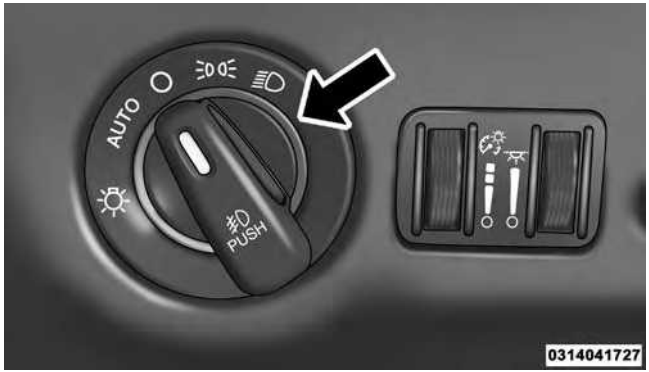

Headlight Switch

Rotate the headlight switch clockwise to the first detent for parking light and instrument panel light operation. Rotate the headlight switch to the second detent for headlight, parking light and instrument panel light operation.

Automatic Headlights — If Equipped

This system automatically turns the headlights on or off according to ambient light levels. To turn the system on, rotate the headlight switch counterclockwise to the AUTO position. When the system is on, the headlight time delay feature is also on. This means the headlights will stay on for up to 90 seconds after you place the ignition into the OFF position. To turn the automatic system off, move the headlight switch out of the AUTO position.

NOTE: The engine must be running before the headlights will come on in the automatic mode.

Headlights On With Wipers (Available With Automatic Headlights Only)

When this feature is active, the headlights will turn on after the wipers are turned on if the headlight switch is placed in the AUTO position and programmable feature

is set to ON. In addition, the headlights will turn off when the wipers are turned off if they were turned on by this feature.

NOTE: The Headlights On with Wipers feature can be turned on or off using the Uconnect® System. Refer to "Uconnect® Settings/Customer Programmable Features" in "Understanding Your Instrument Panel" for further information.

Automatic High Beam Headlamp Control — If Equipped

The Automatic High Beam Headlamp Control system provides increased forward lighting at night by automating high beam control through the use of a digital camera mounted on the windshield. This camera detects vehicle specific light and automatically switches from high beams to low beams until the approaching vehicle is out of view.

NOTE:

- The Automatic High Beam Headlamp Control can be turned on or off using the Uconnect® System. Refer to "Uconnect® Settings" in "Understanding Your Instrument Panel" for further information.
- Broken, muddy, or obstructed headlights and taillights of vehicles in the field of view will cause headlights to remain on longer (closer to the vehicle). Also, dirt, film, and other obstructions on the windshield or camera lens will cause the system to function improperly.

If the windshield or Automatic High Beam Headlamp Control mirror is replaced, the mirror must be re-aimed to ensure proper performance. See your local authorized dealer.

To Activate

1. Turn the headlight switch to the AUTO headlight position.

2. Push the multifunction lever away from you (toward front of vehicle) to engage the high beam mode.

NOTE: This system will not activate until the vehicle is at or above 15 mph (24 km/h).

To Deactivate

1. Pull the multifunction lever toward you (or rearward in car) to manually deactivate the system (normal operation of low beams).
2. Push back on the multifunction lever to reactivate the system.

Headlight Time Delay

This feature provides the safety of headlight illumination for up to 90 seconds when leaving your vehicle in an unlit area.

To activate the delay feature, turn OFF the ignition switch while the headlights are still on. Then, turn off the headlights within 45 seconds. The delay interval begins when the headlight switch is turned off.

NOTE: The lights must be turned off within 45 seconds of turning the ignition OFF to activate this feature.

If you turn the headlights, park lights or ignition switch ON again, the system will cancel the delay.

If you turn the headlights off before the ignition, they will turn off in the normal manner.

NOTE: The Headlight Time Delay is programmable using the Uconnect® System, refer to “Uconnect® Settings” in “Understanding Your Instrument Panel” for further information.

Daytime Running Lights (DRL) — If Equipped

The Daytime Running Lights will turn On when the engine is started and remain On unless the headlamps are turned ON, the parking brake is applied, or the engine is shut Off.

NOTE: If allowed by law in the country in which the vehicle was purchased the Daytime Running Lights can be turned on and off using the Uconnect® System, refer to "Uconnect® Settings" in "Understanding Your Instrument Panel" for further information.

Lights-On Reminder

If the headlights or parking lights are on after the ignition is placed in the OFF position, a chime will sound to alert the driver when the driver's door is opened.

Fog Lights — If Equipped

The front fog light switch is built into the headlight switch.

Fog Light Switch

To activate the front fog lights, turn on the parking lights or the low beam headlights and push the headlight switch. To turn off the front fog lights, either push the headlight switch a second time or turn off the headlight switch.

An indicator light in the instrument cluster illuminates when the fog lights are turned on.

NOTE: The fog lights will operate with the low beam headlights or parking lights on. However, selecting the high beam headlights will turn off the fog lights.

Multifunction Lever

The multifunction lever controls the operation of the turn signals, headlight beam selection and passing lights. The multifunction lever is located on the left side of the steering column.

031563089

Multifunction Lever

Turn Signals

Move the multifunction lever up or down and the arrows on each side of the instrument cluster flash to show proper operation of the front and rear turn signal lights.

NOTE:

- If either light remains on and does not flash, or there is a very fast flash rate, check for a defective outside light bulb. If an indicator fails to light when the lever is moved, it would suggest that the indicator bulb is defective.
- A "Turn Signal On" message will appear in the Drivers Information Display (DID) and a continuous chime will sound if the vehicle is driven more than 1 mi (1.6 km) with either turn signal on.

Lane Change Assist

Tap the lever up or down once, without moving beyond the detent, and the turn signal (right or left) will flash three times then automatically turn off.

High/Low Beam Switch

Push the multifunction lever away from you to switch the headlights to high beam. Pull the multifunction lever toward you to switch the headlights back to low beam.

Flash-To-Pass

You can signal another vehicle with your headlights by lightly pulling the multifunction lever toward you. This will turn on the high beam headlights until the lever is released.

NOTE: If the multifunction lever is held in the flash-to pass position for more than 20 seconds, the high beams will shut off.

Front Map/Reading Lights — If Equipped

Lights are mounted in the overhead console. Each light can be turned on by pushing the switch on either side of the console. These buttons are backlit for night time visibility.

0333063808

Front Map/Reading Lights

To turn the lights off, push the switch a second time. The lights also turn on when a door is opened. The lights will also turn on when the UNLOCK button on the RKE is pushed.

0333063802

Front Map/Reading Light Switches

Courtesy Lights

The courtesy lights can be turned on by pushing the top corner of the lens. To turn the lights off, push the lens a second time.

Courtesy Lights

Ambient Light — If Equipped

The overhead console is equipped with an ambient light feature. This light casts illumination for improved visibility of the floor and center console area.

Ambient Light

Interior Lights

The interior lights come on when a door is opened.

To protect the battery, the interior lights will turn off automatically 10 minutes after the ignition is moved to the LOCK position. This will occur if the interior lights were switched on manually or are on because a door is open. This includes the glove box light and the trunk light. To restore interior light operation, either place the ignition in the ON/RUN position or cycle the light switch.

Dimmer Controls

The dimmer control is part of the headlight switch and is located on the left side of the instrument panel.

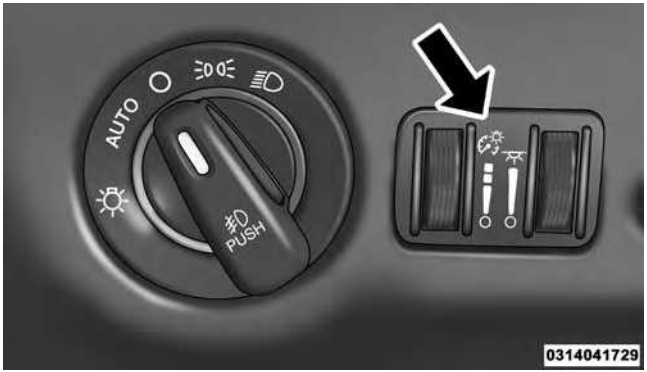

Dimmer Controls

With the parking lights or headlights on, rotating the left dimmer control upward will increase the brightness of the instrument panel lights and lighted cupholders (if equipped).

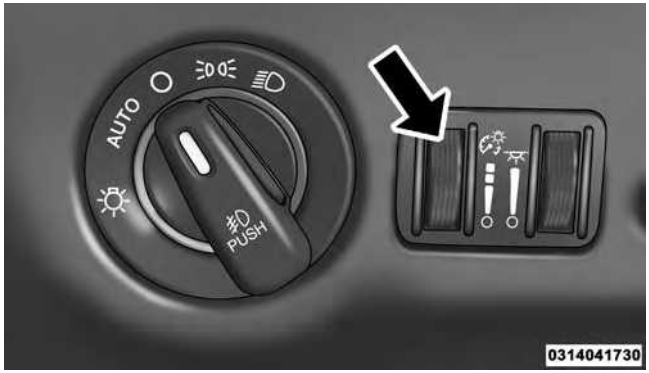

Instrument Panel Dimmer

Dome Light Position

Rotate the left dimmer control completely upward to the second detent to turn on the interior lights. The interior lights will remain on when the dimmer control is in this position.

Interior Light Defeat (OFF)

Rotate the left dimmer control to the extreme bottom "OFF" position. The interior lights will remain off when the doors are open.

Parade Mode (Daytime Brightness Feature)

Rotate the instrument panel dimmer control upward to the first detent. This feature brightens all text displays such as the odometer, Driver Information Display (DID), and radio when the position lights or headlights are on.

WINDSHIELD WIPERS AND WASHERS

The multifunction lever operates the windshield wipers and washer when the ignition is placed in the ON/RUN or ACC position. The multifunction lever is located on the left side of the steering column.

Windshield Wiper/Washer Control

Intermittent Wiper System

Use the intermittent wiper when weather conditions make a single wiping cycle with a variable pause between cycles desirable. Rotate the end of the multifunction lever to the first detent position, and then turn the end of the lever to select the desired delay interval. There are four delay settings, which allow you to regulate the wipe interval from a minimum of one cycle every second to a maximum of approximately 36 seconds between cycles. The delay intervals will double in duration when the vehicle speed is 10 mph (16 km/h) or less.

Wiper Operation

Rotate the end of the multifunction lever to the first detent, past the intermittent settings for low-speed wiper operation, or to the second detent past the intermittent settings for high-speed wiper operation.

CAUTION!

- **Turn the windshield wipers off when driving through an automatic car wash. Damage to the windshield wipers may result if the wiper control is left in any position other than off.**
- **In cold weather, always turn off the wiper switch and allow the wipers to return to the "Park" position before turning off the engine. If the wiper switch is left on and the wipers freeze to the windshield, damage to the wiper motor may occur when the vehicle is restarted.**
- **Always remove any buildup of snow that prevents the windshield wiper blades from returning to the off position. If the windshield wiper control is turned off and the blades cannot return to the off position, damage to the wiper motor may occur.**

Windshield Washers

To use the washer, push the multifunction lever inward (toward the steering column) and hold it for as long as washer spray is desired.

If you activate the washer while the windshield wiper control is in the delay range, the wipers will operate for two wipe cycles after releasing the lever and then resume the intermittent interval previously selected.

If you activate the washer while the windshield wiper is turned off, the wipers will operate for three wipe cycles and then turn off.

WARNING!

Sudden loss of visibility through the windshield could lead to a collision. You might not see other vehicles or other obstacles. To avoid sudden icing of the windshield during freezing weather, warm the windshield with the defroster before and during windshield washer use.

Heated Windshield Washer Nozzles

This feature utilizes a heating element to thaw out any ice buildup that could occur at the outlets or within the windshield washer nozzles. To activate, push the rear window defroster button. When the rear window defroster times out, the heating element will also shut off. If required, to reactivate the heated nozzles push the rear window defroster button as needed.

NOTE: The heated washer nozzles only apply heat to the nozzle outlets to prevent them from freezing and allow the nozzles to dispense windshield washer fluid. Always remove any buildup of snow or ice in front of the washer nozzles as this will prevent the windshield washer fluid from reaching the windshield.

Mist Feature

Rotate the end of the lever downward to the Mist position to activate a single wipe cycle to clear off road mist or spray from a passing vehicle. The wipers will continue to operate until you release the multifunction lever.

NOTE: The mist feature does not activate the washer pump; therefore, no washer fluid will be sprayed on the windshield. The wash function must be used in order to spray the windshield with washer fluid.

Headlights On With Wipers (Available With Automatic Headlights Only)

When this feature is active, the headlights will turn on after the wipers are turned on if the headlight switch is placed in the AUTO position and programmable feature is set to ON. In addition, the headlights will turn off when the wipers are turned off if they were turned on by this feature.

NOTE: The Headlights On with Wipers feature can be turned on or off using the Uconnect® System. Refer to "Uconnect® Settings/Customer Programmable Features" in "Understanding Your Instrument Panel" for further information.

Rain Sensing Wipers — If Equipped

This feature senses moisture on the windshield and automatically activates the wipers for the driver. The feature is especially useful for road splash or overspray from the windshield washers of the vehicle ahead. Rotate the end of the multifunction lever to one of four settings to activate this feature.

The sensitivity of the system can be adjusted with the multifunction lever. Wiper delay position 1 is the least sensitive, and wiper delay position 4 is the most sensitive. Setting 3 should be used for normal rain conditions. Settings 1 and 2 can be used if the driver desires less wiper sensitivity. Setting 4 can be used if the driver desires more sensitivity. Place the wiper switch in the OFF position when not using the system.

NOTE:

- The Rain Sensing feature will not operate when the wiper switch is in the low or high-speed position.
- The Rain Sensing feature may not function properly when ice, or dried salt water is present on the windshield.
- Use of Rain-X® or products containing wax or silicone may reduce Rain Sensing performance.

The Rain Sensing system has protection features for the wiper blades and arms, and will not operate under the following conditions:

- **Low Ambient Temperature** — When the ignition is first turned ON, the Rain Sensing system will not operate until the wiper switch is moved, vehicle speed is greater than 0 mph (0 km/h), or the outside temperature is greater than 32°F (0°C).
- **Transmission In NEUTRAL Position** — When the ignition is ON, and the transmission is in the NEUTRAL position, the Rain Sensing system will not operate until the wiper switch is moved, vehicle speed is greater than 3 mph (5 km/h), or the shift lever is moved out of the NEUTRAL position.

NOTE: Rain Sensing can be turned on and off using the Uconnect® System, refer to "Uconnect® Settings" in "Understanding Your Instrument Panel" for further information.

TILT/TELESCOPING STEERING COLUMN

This feature allows you to tilt the steering column upward or downward. It also allows you to lengthen or shorten the steering column. The tilt/telescoping lever is located below the steering wheel at the end of the steering column.

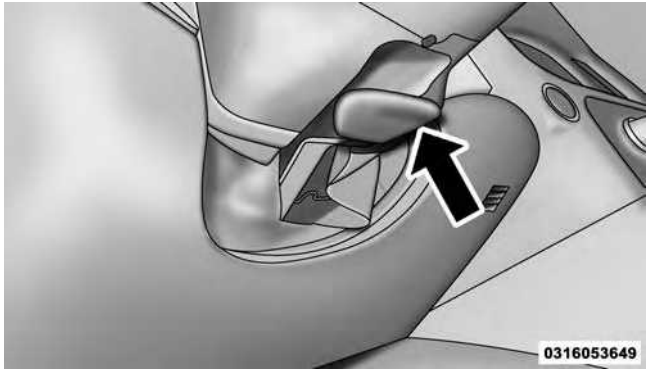

Tilt/Telescoping Control Handle

To unlock the steering column, pull the lever downward. To tilt the steering column, move the steering wheel upward or downward as desired. To lengthen or shorten the steering column, pull the steering wheel outward or push it inward as desired. To lock the steering column in position, push the lever upward until fully engaged.

WARNING!

Do not adjust the steering column while driving. Adjusting the steering column while driving or driving with the steering column unlocked, could cause the driver to lose control of the vehicle. Failure to follow this warning may result in serious injury or death.

POWER TILT/TELESCOPING STEERING COLUMN — IF EQUIPPED

This feature allows you to tilt the steering column upward or downward. It also allows you to lengthen or shorten the steering column. The power tilt/telescoping steering column lever is located below the multifunction lever on the steering column.

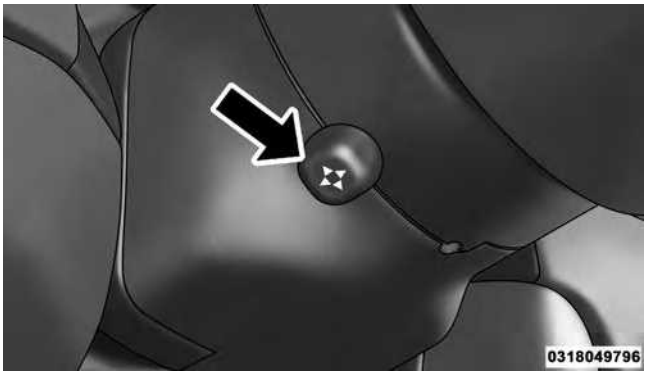

Power Tilt/Telescoping Switch

To tilt the steering column, move the lever up or down as desired. To lengthen or shorten the steering column, pull the lever toward you or push the lever away from you as desired.

NOTE: For vehicles equipped with Driver Memory Seat, you can use your Remote Keyless Entry (RKE) transmitter or the memory switch on the driver's door trim panel to return the tilt/telescopic steering column to preprogrammed positions. Refer to "Driver Memory Seat" in this section.

WARNING!

Do not adjust the steering column while driving. Adjusting the steering column while driving or driving with the steering column unlocked, could cause the driver to lose control of the vehicle. Failure to follow this warning may result in serious injury or death.

HEATED STEERING WHEEL — IF EQUIPPED

The steering wheel contains a heating element that helps warm your hands in cold weather. The heated steering wheel has only one temperature setting. Once the heated steering wheel has been turned on it will operate for up to 80 minutes before automatically shutting off. The heated steering wheel can shut off early or may not turn on when the steering wheel is already warm.

The heated steering wheel control button is located within the Uconnect® system. You can gain access to the control button through the climate screen or the controls screen.

- Push the heated steering wheel button once to turn the heating element ON.
- Push the heated steering wheel button a second time to turn the heating element OFF.

NOTE: The engine must be running for the heated steering wheel to operate.

Vehicles Equipped With Remote Start

On models that are equipped with remote start, the heated steering wheel can be programmed to come on during a remote start through the Uconnect® system. Refer to "Uconnect® Settings" in "Understanding Your Instrument Panel" for further information.

WARNING!

- **Persons who are unable to feel pain to the skin because of advanced age, chronic illness, diabetes, spinal cord injury, medication, alcohol use, exhaustion, or other physical conditions must exercise care when using the steering wheel heater. It may cause burns even at low temperatures, especially if used for long periods.**
- **Do not place anything on the steering wheel that insulates against heat, such as a blanket or steering wheel covers of any type and material. This may cause the steering wheel heater to overheat.**

ADJUSTABLE PEDALS — IF EQUIPPED

The adjustable pedals system is designed to allow a greater range of driver comfort for steering wheel tilt and seat position. This feature allows the brake and accelerator pedals to move toward or away from the driver to provide improved position with the steering wheel.

The switch is located on the front side of the driver's seat cushion side shield.

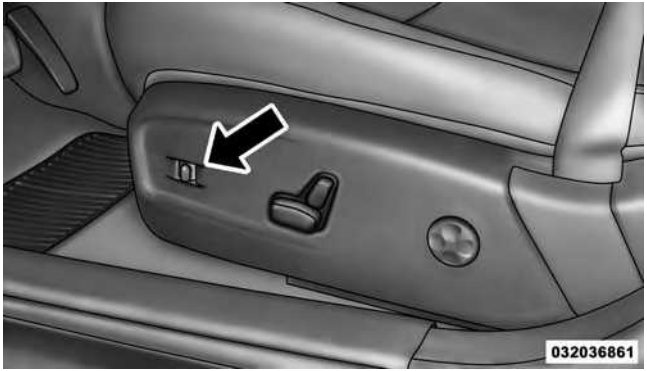

Adjustable Pedals Switch

Push the switch forward to move the pedals forward (toward the front of the vehicle).

Push the switch rearward to move the pedals rearward (toward the driver).

- The pedals can be adjusted with the ignition OFF.

- The pedals **cannot** be adjusted when the vehicle is in REVERSE or when the Electronic Speed Control System is on. The following messages will be displayed on vehicles equipped with the Driver Information Display (DID) if the pedals are attempted to be adjusted when the system is locked out ("Adjustable Pedal Disabled — Cruise Control Engaged" or "Adjustable Pedal Disabled — Vehicle In Reverse").

NOTE:

- Always adjust the pedals to a position that allows full pedal travel.
- Further small adjustments may be necessary to find the best possible seat/pedal position.
- For vehicles equipped with Driver Memory Seat, you can use your Remote Keyless Entry (RKE) transmitter or the memory switch on the driver's door trim panel to return the adjustable pedals to pre-programmed positions. Refer to "Driver Memory Seat" in "Understanding The Features Of Your Vehicle" for further information.

CAUTION!

Do not place any article under the adjustable pedals or impede its ability to move as it may cause damage to the pedal controls. Pedal travel may become limited if movement is stopped by an obstruction in the adjustable pedal's path.

WARNING!

Do not adjust the pedals while the vehicle is moving. You could lose control and have an accident. Always adjust the pedals while the vehicle is parked.

ELECTRONIC SPEED CONTROL — IF EQUIPPED

When engaged, the Electronic Speed Control takes over accelerator operations at speeds greater than 25 mph (40 km/h).

The Electronic Speed Control buttons are located on the right side of the steering wheel.

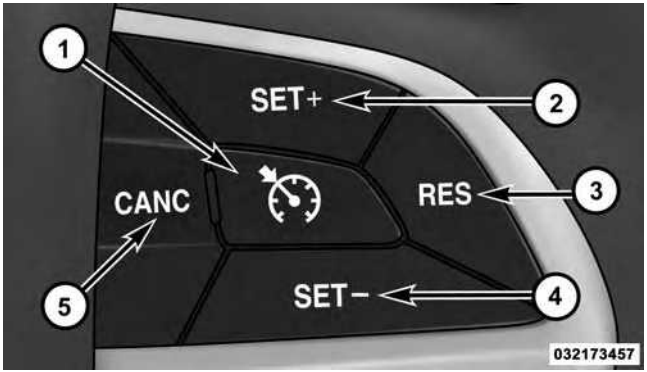

Electronic Speed Control Buttons

1 — ON/OFF
2 — SET+/ACCEL
3 — RESUME
4 — SET-/DECEL
5 — CANCEL

NOTE: In order to ensure proper operation, the Electronic Speed Control System has been designed to shut down if multiple Speed Control functions are operated at the same time. If this occurs, the Electronic Speed Control System can be reactivated by pushing the Electronic Speed Control ON/OFF button and resetting the desired vehicle set speed.

To Activate

Push the ON/OFF button to activate the electronic speed control. CRUISE CONTROL READY will appear on the instrument cluster to indicate the electronic speed control is on. To turn the system off, push the ON/OFF button a second time. CRUISE CONTROL OFF will appear on the instrument cluster to indicate the electronic speed control is off. The system should be turned off when not in use.

WARNING!

Leaving the Electronic Speed Control system on when not in use is dangerous. You could accidentally set the system or cause it to go faster than you want. You could lose control and have an accident. Always leave the system OFF when you are not using it.

To Set A Desired Speed

Turn the Electronic Speed Control ON. When the vehicle has reached the desired speed, push the SET (+) or SET (-) button and release. Release the accelerator and the vehicle will operate at the selected speed. Once a speed has been set a message CRUISE CONTROL SET TO MPH (km/h) will appear indicating what speed was set. A CRUISE indicator lamp, along with set speed will also appear and stay on in the instrument cluster when the speed is set.

To Deactivate

A soft tap on the brake pedal, pushing the CANCEL button, or normal brake pressure while slowing the vehicle will deactivate the Electronic Speed Control without erasing the set speed from memory.

Pushing the ON/OFF button or turning the ignition switch OFF erases the set speed from memory.

To Resume Speed

To resume a previously set speed, push the RES (+) button and release. Resume can be used at any speed above 20 mph (32 km/h).

To Vary The Speed Setting

To Increase Speed

When the Electronic Speed Control is set, you can increase speed by pushing the SET + button.

The drivers preferred units can be selected through the instrument panel settings if equipped. Refer to "Understanding Your Instrument Panel" for more information. The speed increment shown is dependant on the chosen speed unit of U.S. (mph) or Metric (km/h):

U.S. Speed (mph)

- Pushing the SET + button once will result in a 1 mph increase in set speed. Each subsequent tap of the button results in an increase of 1 mph.
- If the button is continually pushed, the set speed will continue to increase until the button is released, then the new set speed will be established.

Metric Speed (km/h)

- Pushing the SET + button once will result in a 1 km/h increase in set speed. Each subsequent tap of the button results in an increase of 1 km/h.

- If the button is continually pushed, the set speed will continue to increase until the button is released, then the new set speed will be established.

To Decrease Speed

When the Electronic Speed Control is set, you can decrease speed by pushing the SET - button.

The drivers preferred units can be selected through the instrument panel settings if equipped. Refer to "Understanding Your Instrument Panel" for more information. The speed decrement shown is dependant on the chosen speed unit of U.S. (mph) or Metric (km/h):

U.S. Speed (mph)

- Pushing the SET - button once will result in a 1 mph decrease in set speed. Each subsequent tap of the button results in a decrease of 1 mph.
- If the button is continually pushed, the set speed will continue to decrease until the button is released, then the new set speed will be established.

Metric Speed (km/h)

- Pushing the SET - button once will result in a 1 km/h decrease in set speed. Each subsequent tap of the button results in a decrease of 1 km/h.
- If the button is continually pushed, the set speed will continue to decrease until the button is released, then the new set speed will be established.

To Accelerate For Passing

Push the accelerator as you would normally. When the pedal is released, the vehicle will return to the set speed.

Using Electronic Speed Control On Hills

The transmission may downshift on hills to maintain the vehicle set speed.

NOTE: The Electronic Speed Control system maintains speed up and down hills. A slight speed change on moderate hills is normal.

On steep hills, a greater speed loss or gain may occur so it may be preferable to drive without Electronic Speed Control.

WARNING!

Electronic Speed Control can be dangerous where the system cannot maintain a constant speed. Your vehicle could go too fast for the conditions, and you could lose control and have an accident. Do not use Electronic Speed Control in heavy traffic or on roads that are winding, icy, snow-covered or slippery.

ADAPTIVE CRUISE CONTROL (ACC) — IF EQUIPPED

Adaptive Cruise Control (ACC) increases the driving convenience provided by cruise control while traveling on highways and major roadways. However, it is not a safety system and not designed to prevent collisions. **Electronic Speed Control function performs differently. Please refer to the proper section within this chapter.**

ACC will allow you to keep cruise control engaged in light to moderate traffic conditions without the constant need to reset your cruise control. ACC utilizes a radar sensor and a forward facing camera designed to detect a vehicle directly ahead of you.

NOTE:

- If the sensor does not detect a vehicle ahead of you, ACC will maintain a fixed set speed.

- If the ACC sensor detects a vehicle ahead, ACC will apply limited braking or acceleration (not to exceed the original set speed) automatically to maintain a preset following distance, while matching the speed of the vehicle ahead.

The Cruise Control system has two control modes:

- Adaptive Cruise Control mode for maintaining an appropriate distance between vehicles.
- Normal (fixed speed) electronic speed control mode for cruising at a constant preset speed. For additional information, refer to "Normal (Fixed Speed) Cruise Control Mode" in this section.

NOTE: Normal (fixed speed) electronic speed control will not react to preceding vehicles. Always be aware of the mode selected.

You can change the mode by using the Cruise Control buttons. The two control modes function differently. Always confirm which mode is selected.

WARNING!

- **Adaptive Cruise Control (ACC) is a convenience system. It is not a substitute for active driving involvement. It is always the driver's responsibility to be attentive of road, traffic, and weather conditions, vehicle speed, distance to the vehicle ahead; and, most importantly, brake operation to ensure safe operation of the vehicle under all road conditions. Your complete attention is always required while driving to maintain safe control of your vehicle. Failure to follow these warnings can result in a collision and death or serious personal injury.**

(Continued)

WARNING! *(Continued)*

- The ACC system:
  - Does not react to pedestrians, oncoming vehicles, and stationary objects (e.g., a stopped vehicle in a traffic jam or a disabled vehicle).
  - Cannot take street, traffic, and weather conditions into account, and may be limited upon adverse sight distance conditions.
  - Does not always fully recognize complex driving conditions, which can result in wrong or missing distance warnings.

(Continued)

WARNING! *(Continued)*

  - Will bring the vehicle to a complete stop while following a target vehicle and hold the vehicle for 2 seconds in the stop position. If the target vehicle does not start moving within two seconds the ACC system will display a message that the system will release the brakes and that the brakes must be applied manually. An audible chime will sound when the brakes are released.

You should switch off the ACC system:

- When driving in fog, heavy rain, heavy snow, sleet, heavy traffic, and complex driving situations (i.e., in highway construction zones).
- When entering a turn lane or highway off ramp; when driving on roads that are winding, icy, snow-covered, slippery, or have steep uphill or downhill slopes.

(Continued)

WARNING! *(Continued)*

- **When towing a trailer up or down steep slopes.**
- **When circumstances do not allow safe driving at a constant speed.**

Adaptive Cruise Control (ACC) Operation

The speed control buttons (located on the right side of the steering wheel) operates the ACC system.

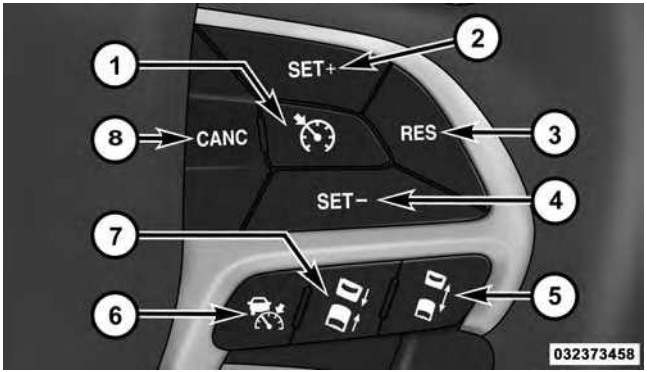

Adaptive Cruise Control Buttons

1 — NORMAL (FIXED SPEED) CRUISE CONTROL ON/OFF
2 — SET+/ACCEL
3 — RESUME
4 — SET-/DECEL
5 — DISTANCE SETTING — INCREASE
6 — ADAPTIVE CRUISE CONTROL (ACC) ON/OFF
7 — DISTANCE SETTING — DECREASE
8 — CANCEL

NOTE: Any chassis/suspension or tire size modifications to the vehicle will effect the performance of the Adaptive Cruise Control and Forward Collision Warning System.

Activating Adaptive Cruise Control (ACC)

You can only engage ACC if the vehicle speed is above 0 mph (0 km/h).

The minimum Set Speed for the ACC system is 20 mph (32 km/h).

When the system is turned on and in the READY state, the Driver Information Display (DID) displays "ACC Ready."

When the system is OFF, the DID displays "Adaptive Cruise Control (ACC) Off."

NOTE: You cannot engage ACC under the following conditions:

- When you apply the brakes.
- When the parking brake is set.
- When the automatic transmission is in PARK, REVERSE or NEUTRAL.
- When the Vehicle speed is outside of the speed range.
- When the brakes are overheated.
- When the driver door is open.
- When the driver seat belt is unbuckled.

To Activate/Deactivate

Push and release the Adaptive Cruise Control (ACC) ON/OFF button. The ACC menu in the DID displays "ACC Ready."

Adaptive Cruise Control Ready

To turn the system OFF, push and release the Adaptive Cruise Control (ACC) ON/OFF button again. At this time, the system will turn off and the DID will display "Adaptive Cruise Control (ACC) Off."

Adaptive Cruise Control Off

WARNING!

Leaving the Adaptive Cruise Control (ACC) system on when not in use is dangerous. You could accidentally set the system or cause it to go faster than you

(Continued)

WARNING! *(Continued)*

want. You could lose control and have a collision. Always leave the system off when you are not using it.

To Set A Desired ACC Speed

When the vehicle reaches the speed desired, push the SET **+** button or the SET **-** button and release. The DID will display the set speed.

If the system is Set when the vehicle speed is below 20 mph (32 km/h), the Set Speed shall be defaulted to 20 mph (32 km/h). If the system is Set when the vehicle speed is above 20 mph (32 km/h), the Set Speed shall be the current speed of the vehicle.

NOTE: ACC cannot be set if there is a stationary vehicle in front of your vehicle in close proximity.

Remove your foot from the accelerator pedal. If you do not, the vehicle may continue to accelerate beyond the set speed. If this occurs:

- The message "DRIVER OVERRIDE" will display in the DID.
- The system will not be controlling the distance between your vehicle and the vehicle ahead. The vehicle speed will only be determined by the position of the accelerator pedal.

To Cancel

The following conditions cancel the system:

- The brake pedal is applied.
- The CANCEL button is pushed.
- An Anti-Lock Brake System (ABS) event occurs.

- The shift lever/gear selector is removed from the Drive position.
- The Electronic Stability Control/Traction Control System (ESC/TCS) activates.
- The vehicle parking brake is applied.
- Driver seatbelt is unbuckled at low speeds.
- Driver door is opened at low speeds.
- The driver switches ESC to full-off mode.

NOTE:

- If your vehicle stays at standstill for longer than two seconds, then the system will cancel and the brake force will be ramped-out. The driver will have to apply the brakes to keep the vehicle at a standstill.
- ACC cannot be resumed if there is a stationary vehicle in-front of your vehicle in close proximity.

To Turn Off

The system will turn off and erase the set speed in memory if:

- The Normal (Fixed Speed) Electronic Speed Control ON/OFF button is pushed.
- The ignition is turned off.
- The Adaptive Cruise Control (ACC) On/Off button is pushed.

To Resume

If there is a set speed in memory push the RES (resume) button and then remove your foot from the accelerator pedal. The DID will display the last set speed.

NOTE:

- If your vehicle stays at standstill for longer than two seconds, then the system will cancel and the brake force will be ramped-out. The driver will have to apply the brakes to keep the vehicle at a standstill.
- ACC cannot be resumed if there is a stationary vehicle in-front of your vehicle in close proximity.

WARNING!

The Resume function should only be used if traffic and road conditions permit. Resuming a set speed that is too high or too low for prevailing traffic and road conditions could cause the vehicle to accelerate or decelerate too sharply for safe operation. Failure to follow these warnings can result in a collision and death or serious personal injury.

To Vary The Speed Setting

To Increase Speed

While ACC is set, you can increase the set speed by pushing the SET + button.

The drivers preferred units can be selected through the instrument panel settings if equipped. Refer to "Understanding Your Instrument Panel" for more information. The speed increment shown is dependant on the chosen speed unit of U.S. (mph) or Metric (km/h):

U.S. Speed (mph)

- Pushing the SET + button once will result in a 1 mph increase in set speed. Each subsequent tap of the button results in an increase of 1 mph.
- If the button is continually pushed, the set speed will continue to increase in 5 mph increments until the button is released. The increase in set speed is reflected in the DID.

Metric Speed (km/h)

- Pushing the SET **+** button once will result in a 1 km/h increase in set speed. Each subsequent tap of the button results in an increase of 1 km/h.
- If the button is continually pushed, the set speed will continue to increase in 10 km/h increments until the button is released. The increase in set speed is reflected in the DID.

To Decrease Speed

While ACC is set, the set speed can be decreased by pushing the SET **-** button.

The drivers preferred units can be selected through the instrument panel settings if equipped. Refer to "Understanding Your Instrument Panel" for more information.

The speed decrement shown is dependant on the chosen speed unit of U.S. (mph) or Metric (km/h):

U.S. Speed (mph)

- Pushing the SET **-** button once will result in a 1 mph decrease in set speed. Each subsequent tap of the button results in a decrease of 1 mph.
- If the button is continually pushed, the set speed will continue to decrease in 5 mph decrements until the button is released. The decrease in set speed is reflected in the DID.

Metric Speed (km/h)

- Pushing the SET **-** button once will result in a 1 km/h decrease in set speed. Each subsequent tap of the button results in a decrease of 1 km/h.

- If the button is continually pushed, the set speed will continue to decrease in 10 km/h decrements until the button is released. The decrease in set speed is reflected in the DID.

NOTE:

- When you override and push the SET **+** button or SET **-** buttons, the new Set Speed will be the current speed of the vehicle.
- When you use the SET **-** button to decelerate, if the engine's braking power does not slow the vehicle sufficiently to reach the set speed, the brake system will automatically slow the vehicle.
- The ACC system applies the brake down to a full stop when following a target vehicle. If an ACC host vehicle follows a target vehicle to a standstill, the host vehicle will release the vehicle brakes two seconds after coming to a full stop.
- The ACC system maintains set speed when driving up hill and down hill. However, a slight speed change on moderate hills is normal. In addition, downshifting may occur while climbing uphill or descending downhill. This is normal operation and necessary to maintain set speed. When driving up hill and down hill, the ACC system will cancel if the braking temperature exceeds normal range (overheated).

Setting The Following Distance In ACC

The specified following distance for ACC can be set by varying the distance setting between four bars (longest), three bars (long), two bars (medium) and one bar (short). Using this distance setting and the vehicle speed, ACC calculates and sets the distance to the vehicle ahead. This distance setting displays in the DID.

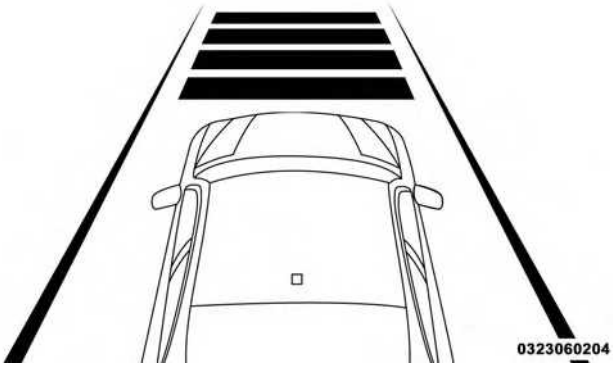

Distance Setting 4 Bars (Longest)

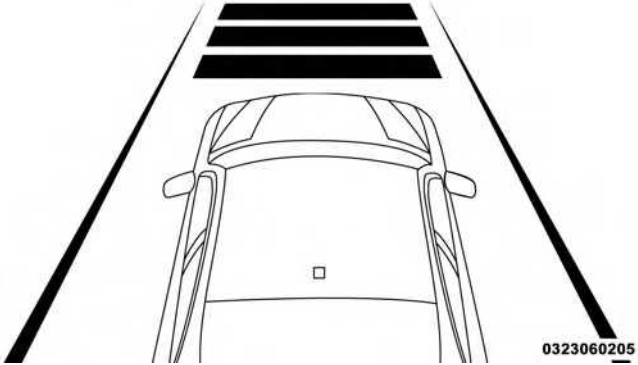

Distance Setting 3 Bars (Long)

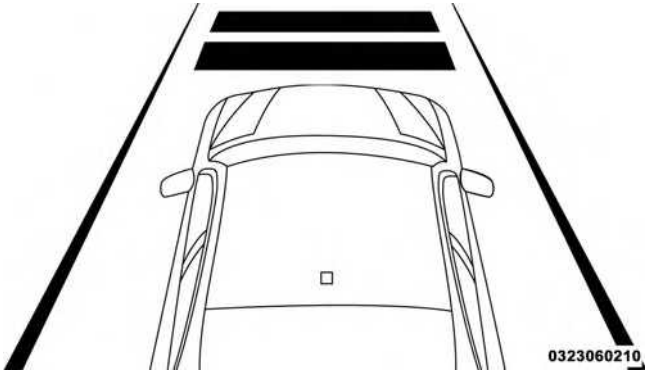

Distance Setting 2 Bars (Medium)

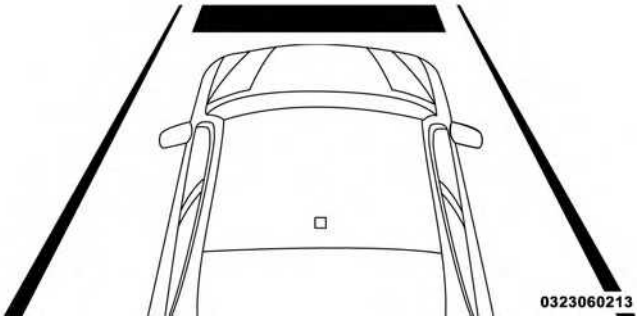

Distance Setting 1 Bar (Short)

To increase the distance setting, push the Distance Setting — Increase button and release. Each time the button is pushed, the distance setting increases by one bar (longer).

To decrease the distance setting, push the Distance Setting — Decrease button and release. Each time the button is pushed, the distance setting decreases by one bar (shorter).

If there is no vehicle ahead, the vehicle will maintain the set speed. If a slower moving vehicle is detected in the same lane, the DID displays the "Sensed Vehicle Indicator" icon, and the system adjusts vehicle speed automatically to maintain the distance setting, regardless of the set speed.

The vehicle will then maintain the set distance until:

- The vehicle ahead accelerates to a speed above the set speed.
- The vehicle ahead moves out of your lane or view of the sensor.
- The distance setting is changed.
- The system disengages. (Refer to the information on ACC Activation).

The maximum braking applied by ACC is limited; however, the driver can always apply the brakes manually, if necessary.

NOTE: The brake lights will illuminate whenever the ACC system applies the brakes.

A Proximity Warning will alert the driver if ACC predicts that its maximum braking level is not sufficient to maintain the set distance. If this occurs, a visual alert "BRAKE" will flash in the DID and a chime will sound while ACC continues to apply its maximum braking capacity.

Brake Alert

NOTE: The "Brake!" Screen in the DID is a warning for the driver to take action and does not necessarily mean that the Forward Collision Warning system is applying the brakes autonomously.

Overtake Aid

When driving with ACC engaged and following a Target vehicle, the system will provide an additional acceleration to assist in passing vehicles in front. This additional acceleration is triggered when the driver utilizes the left or right turn signal. The Overtake Aid will only provide additional acceleration if the vehicle moves with the corresponding turn signal and until the current set speed is reached. The ACC system will automatically detect traffic direction in the respective lane when the right or left turn signal is utilized.

ACC Operation At Stop

If the ACC system brings your vehicle to a standstill while following a target vehicle, if the target vehicle starts moving within two seconds of your vehicle coming to a standstill, your vehicle will resume motion without the need for any driver action.

If the target vehicle does not start moving within two seconds of your vehicle coming to a standstill, the ACC with Stop system will cancel and the brakes will release. A cancel message will display on the DID and produce a warning chime. Driver intervention will be required at this moment.

While ACC with Stop is holding your vehicle at a standstill, if the driver seatbelt is unbuckled or the driver door is opened, the ACC with Stop system will cancel and the brakes will release. A cancel message will display on the DID and produce a warning chime. Driver intervention will be required at this moment.

WARNING!

When the ACC system is resumed, the driver must ensure that there are no pedestrians, vehicles or objects in the path of the vehicle. Failure to follow

(Continued)

WARNING! *(Continued)*

these warnings can result in a collision and death or serious personal injury.

Adaptive Cruise Control (ACC) Menu

The DID displays the current ACC system settings. The DID is located in the center of the instrument cluster. The information it displays depends on ACC system status.

Push the ADAPTIVE CRUISE CONTROL (ACC) ON/OFF button (located on the steering wheel) until one of the following displays in the DID:

Adaptive Cruise Control Off

When ACC is deactivated, the display will read “Adaptive Cruise Control Off.”

Adaptive Cruise Control Ready

When ACC is activated but the vehicle speed setting has not been selected, the display will read "Adaptive Cruise Control Ready."

Push the SET + or the SET- button (located on the steering wheel) and the following will display in the DID:

ACC SET

When ACC is set, the set speed will display in the instrument cluster.

The ACC screen may display once again if any ACC activity occurs, which may include any of the following:

- System Cancel
- Driver Override
- System Off
- ACC Proximity Warning
- ACC Unavailable Warning
- The DID will return to the last display selected after five seconds of no ACC display activity

Display Warnings And Maintenance

"Wipe Front Radar Sensor In Front Of Vehicle" Warning

The "ACC/FCW Unavailable Wipe Front Radar Sensor" warning will display and also a chime will indicate when conditions temporarily limit system performance.

This most often occurs at times of poor visibility, such as in snow or heavy rain. The ACC system may also become temporarily blinded due to obstructions, such as mud, dirt or ice. In these cases, the DID will display "ACC/FCW Unavailable Wipe Front Radar Sensor" and the system will deactivate.

The "ACC/FCW Unavailable Wipe Front Radar Sensor" message can sometimes be displayed while driving in highly reflective areas (i.e. tunnels with reflective tiles, or ice and snow). The ACC system will recover after the vehicle has left these areas. Under rare conditions, when the radar is not tracking any vehicles or objects in its path this warning may temporarily occur.

NOTE: If the "ACC/FCW Unavailable Wipe Front Radar Sensor" warning is active Normal (Fixed Speed) Cruise Control is still available. For additional information refer to "Normal (Fixed Speed) Cruise Control Mode" in this section.

If weather conditions are not a factor, the driver should examine the sensor. It may require cleaning or removal of an obstruction. The sensor is located in the center of the vehicle behind the lower grille.

To keep the ACC System operating properly, it is important to note the following maintenance items:

- Always keep the sensor clean. Carefully wipe the sensor lens with a soft cloth. Be cautious not to damage the sensor lens.
- Do not remove any screws from the sensor. Doing so could cause an ACC system malfunction or failure and require a sensor realignment.
- If the sensor or front end of the vehicle is damaged due to a collision, see your authorized dealer for service.
- Do not attach or install any accessories near the sensor, including transparent material or aftermarket grilles. Doing so could cause an ACC system failure or malfunction.

When the condition that deactivated the system is no longer present, the system will return to the "Adaptive Cruise Control Off" state and will resume function by simply reactivating it.

NOTE:

- If the "ACC/FCW Unavailable Wipe Front Radar Sensor" message occurs frequently (e.g. more than once on every trip) without any snow, rain, mud, or other obstruction, have the radar sensor realigned at your authorized dealer.
- Installing a snow plow, front-end protector, an aftermarket grille or modifying the grille is not recommended. Doing so may block the sensor and inhibit ACC/FCW operation.

"Clean Front Windshield" Warning

The "ACC/FCW Limited Functionality Clean Front Windshield" warning will display and also a chime will indicate when conditions temporarily limit system performance. This most often occurs at times of poor visibility, such as in snow or heavy rain and fog. The ACC system may also become temporarily blinded due to obstructions, such as mud, dirt, or ice on windshield and fog on the inside of glass. In these cases, the DID will display "ACC/FCW Limited Functionality Clean Front Windshield" and the system will have degraded performance.

The "ACC/FCW Limited Functionality Clean Front Windshield" message can sometimes be displayed while driving in adverse weather conditions. The ACC/FCW system will recover after the vehicle has left these areas.

Under rare conditions, when the camera is not tracking any vehicles or objects in its path this warning may temporarily occur.

If weather conditions are not a factor, the driver should examine the windshield and the camera located on the back side of the inside rear view mirror. They may require cleaning or removal of an obstruction.

When the condition that created limited functionality is no longer present, the system will return to full functionality.

NOTE: If the "ACC/FCW Limited Functionality Clean Front Windshield" message occurs frequently (e.g. more than once on every trip) without any snow, rain, mud, or other obstruction, have the windshield and forward facing camera inspected at your authorized dealer.

Service ACC/FCW Warning

If the system turns off, and the DID displays "ACC/FCW Unavailable Service Required" or "Cruise/FCW Unavailable Service Required", there may be an internal system fault or a temporary malfunction that limits ACC functionality. Although the vehicle is still drivable under normal conditions, ACC will be temporarily unavailable. If this occurs, try activating ACC again later, following an ignition cycle. If the problem persists, see your authorized dealer.

Precautions While Driving With ACC

In certain driving situations, ACC may have detection issues. In these cases, ACC may brake late or unexpectedly. The driver needs to stay alert and may need to intervene.

Towing A Trailer

Towing a trailer is not advised when using ACC.

Offset Driving

ACC may not detect a vehicle in the same lane that is offset from your direct line of travel, or a vehicle merging in from a side lane. There may not be sufficient distance to the vehicle ahead. The offset vehicle may move in and out of the line of travel, which can cause your vehicle to brake or accelerate unexpectedly.

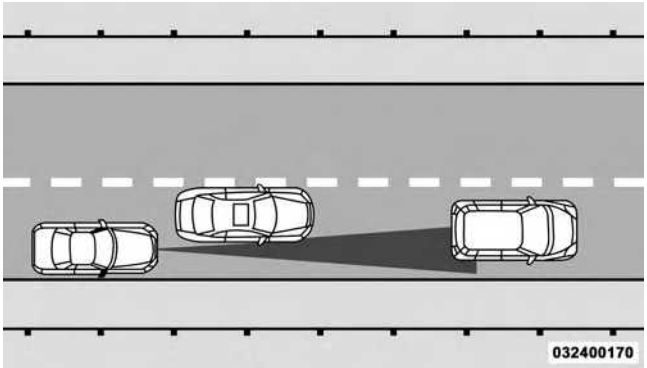

Offset Driving Condition Example

Turns And Bends

When driving on a curve with ACC engaged, the system may decrease the vehicle speed and acceleration for stability reasons, with no target vehicle detected. Once

the vehicle is out of the curve the system will resume your original Set Speed. This is a part of normal ACC system functionality.

NOTE: On tight turns ACC performance may be limited.

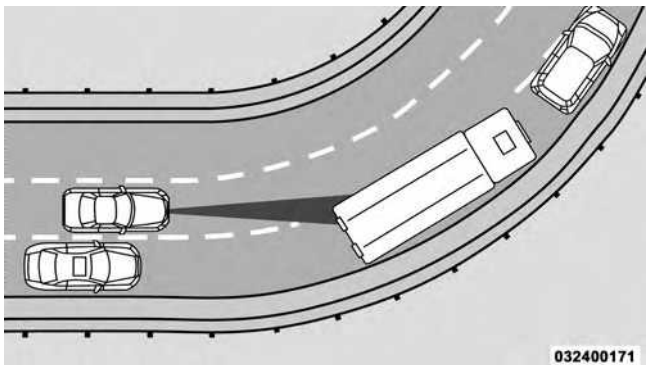

Turn Or Bend Example

Using ACC On Hills

When driving on hills, ACC may not detect a vehicle in your lane. Depending on the speed, vehicle load, traffic conditions, and the steepness of the hills, ACC performance may be limited.

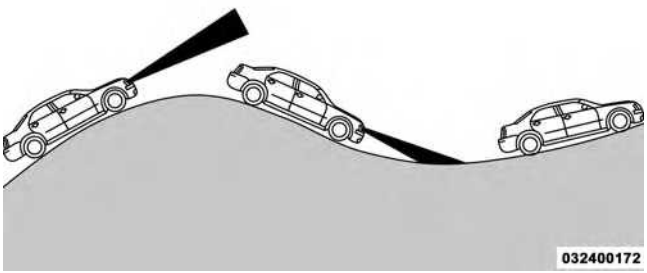

ACC Hill Example

Lane Changing

ACC may not detect a vehicle until it is completely in the lane in which you are traveling. In the illustration shown, ACC has not yet detected the vehicle changing lanes and it may not detect the vehicle until it's too late for the ACC system to take action. ACC may not detect a vehicle until it is completely in the lane. There may not be sufficient distance to the lane-changing vehicle. Always be attentive and ready to apply the brakes if necessary.

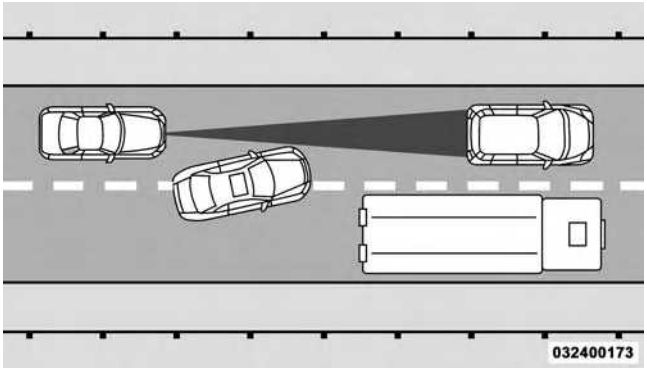

Lane Changing Example

Narrow Vehicles

Some narrow vehicles traveling near the outer edges of the lane or edging into the lane are not detected until they have moved fully into the lane. There may not be sufficient distance to the vehicle ahead.

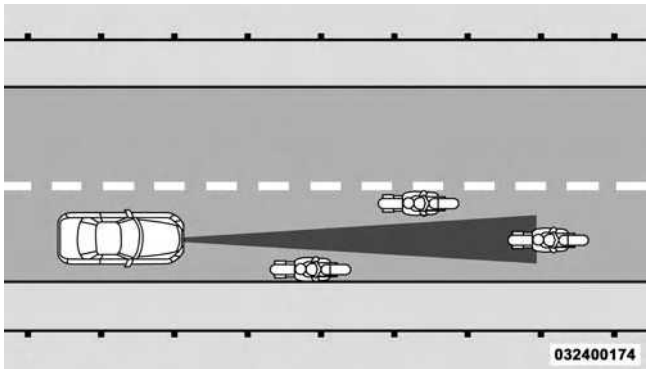

Narrow Vehicle Example

Stationary Objects And Vehicles

ACC does not react to stationary objects and stationary vehicles. For example, ACC will not react in situations where the vehicle you are following exits your lane and the vehicle ahead is stopped in your lane. Always be attentive and ready to apply the brakes if necessary.

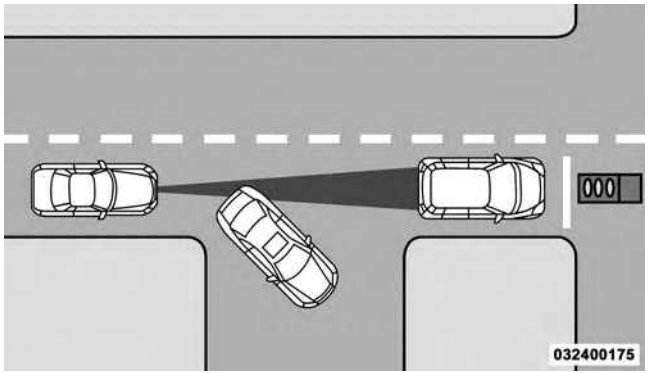

Stationary Object And Stationary Vehicle Example

General Information

This vehicle has systems that operate on radio frequency that comply with Part 15 of the Federal Communications Commission (FCC) rules and with Industry Canada Standards RSS- GEN/210/220/310.

Operation is subject to the following two conditions:

1. The device may not cause harmful interference.
2. The device must accept any interference received, including interference that may cause undesired operation of the device.

Changes or modifications to any of these systems by other than an authorized service facility could void authorization to use this equipment.

Normal (Fixed Speed) Electronic Speed Control Mode

In addition to Adaptive Cruise Control mode, a Normal (Fixed Speed) Electronic Speed Control mode is available for cruising at fixed speeds. The Normal (Fixed Speed) Electronic Speed Control mode is designed to maintain a set cruising speed without requiring the driver to operate the accelerator. Electronic Speed Control can only be operated if the vehicle speed is above 20 mph (32 km/h).

To change between the different control modes, push the ADAPTIVE CRUISE CONTROL (ACC) ON/OFF button which turns the ACC and the NORMAL (Fixed Speed) ELECTRONIC SPEED CONTROL OFF. Pushing of the NORMAL (Fixed Speed) ELECTRONIC SPEED CONTROL ON/OFF button will result in turning ON (changing to) the Normal (Fixed Speed) Electronic Speed Control mode.

WARNING!

In the normal Cruise Control mode, the system will not react to vehicles ahead. In addition, the proximity warning does not activate and no alarm will sound even if you are too close to the vehicle ahead since neither the presence of the vehicle ahead nor the vehicle-to vehicle distance is detected. Be sure to maintain a safe distance between your vehicle and the vehicle ahead. Always be aware which mode is selected.

To Set A Desired Speed

Turn the Normal (Fixed Speed) Electronic Speed Control ON. When the vehicle has reached the desired speed, push the SET (+) or SET (-) button and release. Release the accelerator and the vehicle will operate at the selected speed.

Once a speed has been set a message (CRUISE CONTROL SET TO MPH/KM) will appear indicating what speed was set. This light will turn on when the electronic speed control is SET.

To Vary The Speed Setting

To Increase Speed

When the Normal (Fixed Speed) Electronic Speed Control is set, you can increase speed by pushing the SET + button.

The drivers preferred units can be selected through the instrument panel settings if equipped. Refer to "Understanding Your Instrument Panel" for more information. The speed increment shown is dependant on the speed of U.S. (mph) or Metric (km/h) units:

U.S. Speed (mph)

- Pushing the SET + button once will result in a 1 mph increase in set speed. Each subsequent tap of the button results in an increase of 1 mph.

- If the button is continually pushed, the set speed will continue to increase in 5 mph increments until the button is released. The increase in set speed is reflected in the DID display.

Metric Speed (km/h)

- Pushing the SET **+** button once will result in a 1 km/h increase in set speed. Each subsequent tap of the button results in an increase of 1 km/h.
- If the button is continually pushed, the set speed will continue to increase in 10 km/h increments until the button is released. The increase in set speed is reflected in the DID display.

To Decrease Speed

When the Normal (Fixed Speed) Cruise Control is set, you can decrease speed by pushing the SET **-** button.

The drivers preferred units can be selected through the instrument panel settings if equipped. Refer to "Understanding Your Instrument Panel" for more information. The speed decrement shown is dependant on the speed of U.S. (mph) or Metric (km/h) units:

U.S. Speed (mph)

- Pushing the SET **-** button once will result in a 1 mph decrease in set speed. Each subsequent tap of the button results in a decrease of 1 mph.
- If the button is continually pushed, the set speed will continue to decrease in 5 mph decrements until the button is released. The decrease in set speed is reflected in the DID display.

Metric Speed (km/h)

- Pushing the SET **-** button once will result in a 1 km/h decrease in set speed. Each subsequent tap of the button results in a decrease of 1 km/h.

- If the button is continually pushed, the set speed will continue to decrease in 10 km/h decrements until the button is released. The decrease in set speed is reflected in the DID display.

To Cancel

The following conditions will cancel the Normal (Fixed Speed) Electronic Speed Control without clearing the memory:

- The brake pedal is applied.
- The CANCEL button is pushed.
- The Electronic Stability Control/Traction Control System (ESC/TCS) activates.
- The vehicle parking brake is applied.
- The braking temperature exceeds normal range (overheated).
- The shift lever/gear selector is removed from the Drive position.

To Resume Speed

To resume a previously set speed, push the RES button and release. Resume can be used at any speed above 20 mph (32 km/h).

To Turn Off

The system will turn off and erase the set speed in memory if:

- The Normal (Fixed Speed) Electronic Speed Control ON/OFF button is pushed.
- The ignition is turned off.
- The Adaptive Cruise Control (ACC) On/Off button is pushed.

FORWARD COLLISION WARNING (FCW) WITH MITIGATION — IF EQUIPPED

Forward Collision Warning (FCW) With Mitigation Operation

The Forward Collision Warning (FCW) system with mitigation provides the driver with audible warnings, visual warnings (within the DID), and may apply a brake jerk to warn the driver when it detects a potential frontal collision. The warnings and limited braking are intended to provide the driver with enough time to react, avoid or mitigate the potential collision.

NOTE: FCW monitors the information from the forward looking sensors as well as the Electronic Brake Controller (EBC), to calculate the probability of a forward collision. When the system determines that a forward collision is probable, the driver will be provided with audible and visual warnings and may provide a brake jerk warning. If the driver does not take action based upon these progressive warnings, then the system will provide a limited level of active braking to help slow the vehicle and mitigate the potential forward collision. If the driver reacts to the warnings by braking and the system determines that the driver intends to avoid the collision by braking but has not applied sufficient brake force, the system will compensate and provide additional brake force as required. If a Forward Collision Warning with Mitigation event begins at a speed below 20 mph (32 km/h), the system may provide the maximum or partial braking to mitigate the potential forward collision. If the Forward Collision Warning with Mitigation event stops the vehicle completely, the system will hold the vehicle at standstill for two seconds and then release the brakes.

FCW Message

When the system determines a collision with the vehicle in front of you is no longer probable, the warning message will be deactivated.

NOTE:

- The minimum speed for FCW activation is 1 mph (2 km/h).
- The FCW alerts may be triggered on objects other than vehicles such as guard rails or sign posts based on the course prediction. This is expected and is a part of normal FCW activation and functionality.
- It is unsafe to test the FCW system. To prevent such misuse of the system, after four Active Braking events within an ignition cycle, the Active Braking portion of FCW will be deactivated until the next ignition cycle.
- The FCW system is intended for on-road use only. If the vehicle is taken off-road, the FCW system should be deactivated to prevent unnecessary warnings to the surroundings.

WARNING!

Forward Collision Warning (FCW) is not intended to avoid a collision on its own, nor can FCW detect every type of potential collision. The driver has the responsibility to avoid a collision by controlling the vehicle via braking and steering. Failure to follow this warning could lead to serious injury or death.

Turning FCW ON Or OFF

NOTE: The default status of FCW is "On", this allows the system to warn you of a possible collision with the vehicle in front of you.

The forward collision button is located on the switch panel below the Uconnect® display.

To turn the FCW system OFF, push the forward collision button once to turn the system OFF (led turns on).

To turn the FCW system back ON, push the forward collision button again to turn the system ON (led turns off).

Changing the FCW status to "Off" prevents the system from warning you of a possible collision with the vehicle in front of you.

Changing the Active Braking status to "Off" prevents the system from providing limited autonomous braking, or additional brake support if the driver is not braking adequately in the event of a potential frontal collision.

NOTE: The FCW system state is kept in memory from one ignition cycle to the next. If the system is turned OFF, it will remain off when the vehicle is restarted.

Changing FCW And Active Braking Status

The FCW Sensitivity And Active Braking Settings are programmable through the Uconnect® System. Refer to "Uconnect® Settings" in "Understanding Your Instrument Panel" for further information.

The default status of FCW is the "Far" setting and the Active Braking is the "On" setting, this allows the system to warn you of a possible collision with the vehicle in front of you when you are farther away and it applies limited braking. This gives you the most reaction time to avoid a possible collision.

Changing the FCW status to the "Near" setting, allows the system to warn you of a possible collision with the vehicle in front of you when you are much closer. This setting provides less reaction time than the "Far" setting, which allows for a more dynamic driving experience.

NOTE:

- The system will retain the last setting selected by the driver after ignition shut down.
- FCW may not react to irrelevant objects such as overhead objects, ground reflections, objects not in the path of the car, stationary objects that are far away, oncoming traffic, or leading vehicles with the same or higher rate of speed.
- FCW will be disabled like ACC, with the unavailable screens.

FCW Limited Warning

If the DID displays "ACC/FCW Limited Functionality" or "ACC/FCW Limited Functionality Clean Front Windshield" momentarily, there may be a condition that limits FCW functionality. Although the vehicle is still drivable under normal conditions, the active braking may not be

fully available. Once the condition that limited the system performance is no longer present, the system will return to its full performance state. If the problem persists, see your authorized dealer.

Service FCW Warning

If the system turns off, and the DID displays:

- ACC/FCW Unavailable Service Required
- Cruise/FCW Unavailable Service Required

This indicates there is an internal system fault. Although the vehicle is still drivable under normal conditions, have the system checked by an authorized dealer.

LANESENSE — IF EQUIPPED

LaneSense Operation

The LaneSense system is operational at speeds above 37 mph (60 km/h) and below 112 mph (180 km/h). The LaneSense system uses a forward looking camera to detect lane markings and measure vehicle position within the lane boundaries.

When both lane markings are detected and the driver unintentionally drifts out of the lane (no turn signal applied), the LaneSense system provides a haptic warning in the form of torque applied to the steering wheel to prompt the driver to remain within the lane boundaries. If the driver continues to unintentionally drift out of the lane, the LaneSense system provides a visual warning through the Driver Information Display (DID) to prompt the driver to remain within the lane boundaries.

The driver may manually override the haptic warning by applying torque into the steering wheel at any time.

When only a single lane marking is detected and the driver unintentionally drifts across the lane marking (no turn signal applied), the LaneSense system provides a visual warning through the DID to prompt the driver to

remain within the lane. When only a single lane marking is detected, a haptic (torque) warning will not be provided.

NOTE: When operating conditions have been met, the LaneSense system will monitor if the driver's hands are on the steering wheel and provides an audible warning to the driver when the driver's hands are not detected on the steering wheel. The system will cancel if the driver does not return their hands to the wheel.

Turning LaneSense ON Or OFF

The default status of LaneSense is "OFF".

The LaneSense button is located on the center stack below the Uconnect® display.

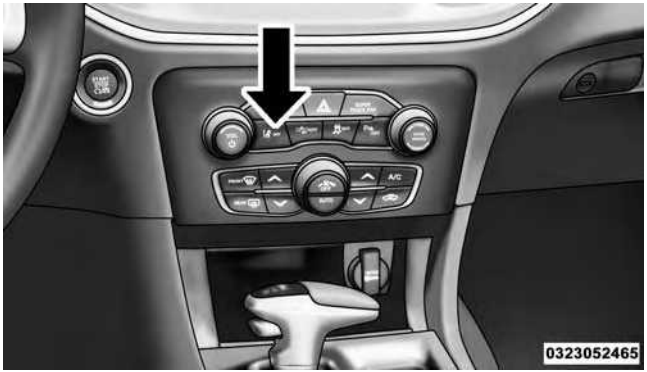

LaneSense Button Location

To turn the LaneSense system ON, push the LaneSense button to turn the system ON (LED turns off). A "Lane Sense On" message is shown in the DID.

To turn the LaneSense system OFF, push the LaneSense button once to turn the system OFF (LED turns on).

NOTE: The LaneSense system will retain the last system state ON or OFF from the last ignition cycle when the ignition is changed to the ON/RUN position.

LaneSense Warning Message

The LaneSense system will indicate the current lane drift condition through the Driver Information Display (DID).

7.0 Driver Information Display (DID) Screen — If Equipped

When the LaneSense system is ON; the lane lines are gray when both of the lane boundaries have not been detected and the LaneSense indicator is solid white.

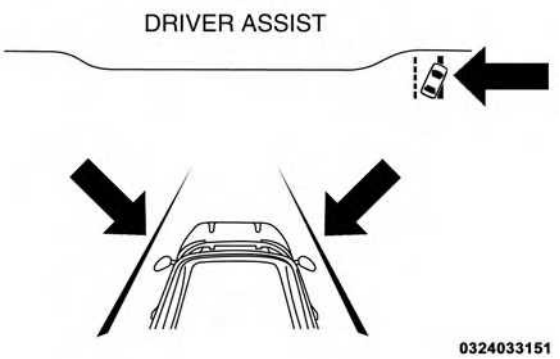

System ON (Gray Lines/White Indicator)

Left Lane Departure — Only Left Lane Detected

- When the LaneSense system is ON, the LaneSense indicator is solid white when only the left lane marking has been detected and the system is ready to provide visual warnings in the DID if an unintentional lane departure occurs.
- When the LaneSense system senses the lane has been approached and is in a lane departure situation, the left thick lane line flashes yellow (on/off), the left thin line remains solid yellow and the LaneSense indicator changes from solid white to flashing yellow.

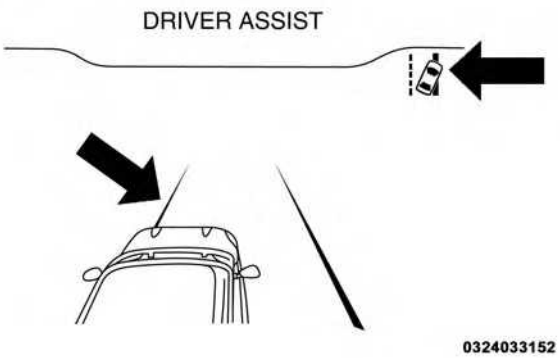

Lane Approached (Flashing Yellow Thick Line, Solid Yellow Thin Line/Flashing Yellow Indicator)

NOTE: The LaneSense system operates with the similar behavior for a right lane departure when only the right lane marking has been detected.

Left Lane Departure — Both Lanes Detected

- When the LaneSense system is ON, the lane lines turn from gray to white to indicate that both of the lane markings have been detected. The LaneSense indicator is solid green when both lane markings have been detected and the system is "armed" to provide visual warnings in the DID and a torque warning in the steering wheel if an unintentional lane departure occurs.

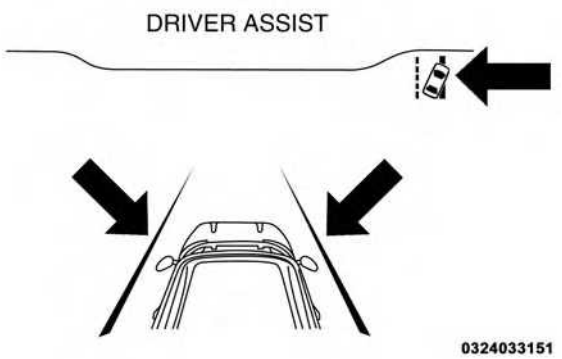

Lanes Sensed (White Lines/Green Indicator)

- When the LaneSense system senses a lane drift situation, the left thick lane line and left thin line turn solid yellow. The LaneSense indicator changes from solid green to solid yellow. At this time torque is applied to the steering wheel in the opposite direction of the lane boundary.
- For example: If approaching the left side of the lane the steering wheel will turn to the right.

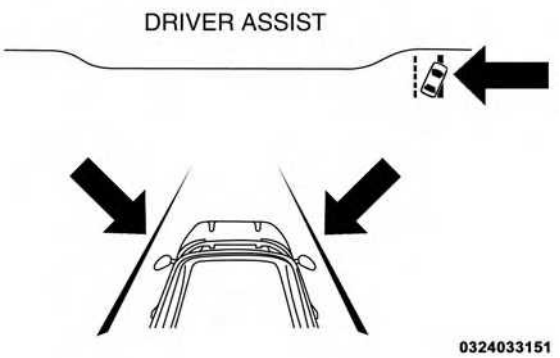

Lane Sensed (Solid Yellow Thick Line, Solid Yellow Thin Line/Solid Yellow Indicator)

- When the LaneSense system senses the lane has been approached and is in a lane departure situation, the left thick lane line flashes yellow (on/off) and the left thin line remains solid yellow. The LaneSense indicator changes from solid yellow to flashing yellow. At this time torque is applied to the steering wheel in the opposite direction of the lane boundary.
- For example: If approaching the left side of the lane the steering wheel will turn to the right.

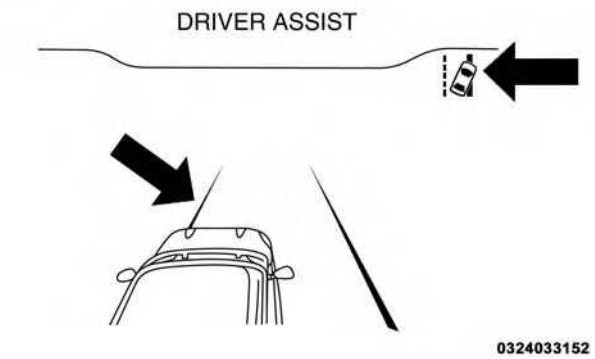

Lane Approached (Flashing Yellow Thick Line, Solid Yellow Thin Line/Flashing Yellow Indicator)

NOTE: The LaneSense system operates with the similar behavior for a right lane departure.

Changing LaneSense Status

The LaneSense system settings can be configured through the Uconnect® system screen.

Follow these steps to change the LaneSense settings:

1. Push the “Controls” button on touchscreen located on the bottom of the Uconnect® display.
2. Push the “Settings” button.
3. Push the “Safety & Driving Assistance” button.

When in the Safety & Driving Assistance screen, you can configure the intensity of the torque warning and the warning zone sensitivity (early/late) through the personalization settings.

NOTE:

- When enabled the system operates above 37 mph (60 km/h) and below 112 mph (180 km/h).
- Use of the turn signal suppresses the warnings.
- The system will not apply torque to the steering wheel whenever a safety system engages. (anti-lock brakes, traction control system, electronic stability control, forward collision warning, etc.)

PARKSENSE® REAR PARK ASSIST — IF EQUIPPED

The ParkSense® Rear Park Assist system provides visual and audible indications of the distance between the rear fascia and a detected obstacle when backing up, e.g. during a parking maneuver. Refer to "ParkSense® System Usage Precautions" in this section for limitations of this system and recommendations.

ParkSense® will retain the last system state (enabled or disabled) from the last ignition cycle when the ignition is changed to the ON/RUN position.

ParkSense® can be active only when the shift lever is in REVERSE. If ParkSense® is enabled at this shift lever position, the system will remain active until the vehicle speed is increased to approximately 7 mph (11 km/h) or above. The system will become active again if the vehicle speed is decreased to speeds less than approximately 6 mph (9 km/h).

ParkSense® Sensors

The four ParkSense® sensors, located in the rear fascia/bumper, monitor the area behind the vehicle that is within the sensors' field of view. The sensors can detect obstacles from approximately 12 in (30 cm) up to 79 in (200 cm) from the rear fascia/bumper in the horizontal direction, depending on the location, type and orientation of the obstacle.

ParkSense® Warning Display

The ParkSense® Warning screen will only be displayed if Sound and Display is selected from the Uconnect® System. Refer to "Uconnect® Settings" in "Understanding Your Instrument Panel" for further information.

The ParkSense® Warning screen is located within the Driver Information Display (DID). It provides visual warnings to indicate the distance between the rear fascia/bumper and the detected obstacle. Refer to "Driver Information Display (DID)" in "Understanding Your Instrument Panel" for further information.

ParkSense® Display

When the vehicle is in REVERSE, the warning display will turn ON indicating the system status.

The system will indicate a detected obstacle by showing a single arc in one or more regions based on the obstacle's distance and location relative to the vehicle.

If an obstacle is detected in the center rear region, the display will show a single solid arc in the center rear region and will produce a one-half second tone. As the vehicle moves closer to the obstacle, the display will show the single arc moving closer to the vehicle and the sound tone will change from slow, to fast, to continuous.

If an obstacle is detected in the left and/or right rear region, the display will show a single flashing arc in the left and/or right rear region and will produce a fast sound tone. As the vehicle moves closer to the obstacle, the display will show the single arc moving closer to the vehicle and the sound tone will change from fast, to continuous.

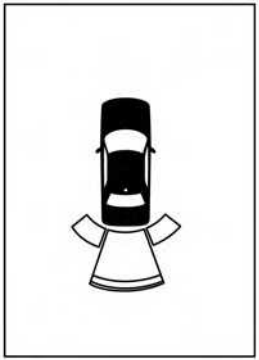

0327045850

Single 1/2 Second Tone/Solid Arc

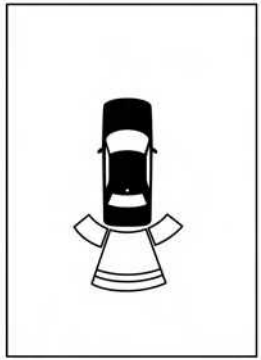

0327045851

Slow Tone/Solid Arc

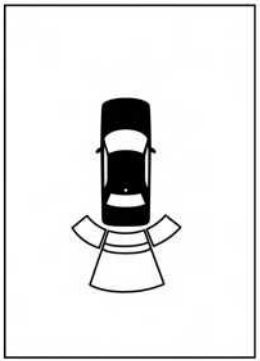

0327045853

Fast Tone/Flashing Arc

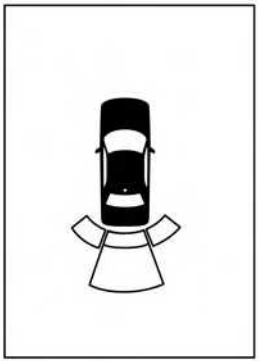

0327045854

Continuous Tone/Flashing Arc

The vehicle is close to the obstacle when the warning display shows one flashing arc and sounds a continuous tone. The following chart shows the warning alert operation when the system is detecting an obstacle:

WARNING ALERTS							
Rear Distance (in/cm)	Greater than 79 in (200 cm)	79-59 in (200-150 cm)	59-47 in (150-120 cm)	47-39 in (120-100 cm)	39-25 in (100-65 cm)	25-12 in (65-30 cm)	Less than 12 in (30 cm)
Audible Alert Chime	None	Single 1/2-Second Tone (for rear center only)	Slow (for rear center only)	Slow (for rear center only)	Fast (for rear center only)	Fast	Continuous

WARNING ALERTS							
Arc — Left Rear	None	None	None	None	None	2nd Flashing	1st Flashing
Arc — Center Rear	None	6th Solid	5th Solid	4th Solid	3rd Flashing	2nd Flashing	1st Flashing
Arc — Right Rear	None	None	None	None	None	2nd Flashing	1st Flashing
Radio Volume Reduced	No	Yes	Yes	Yes	Yes	Yes	Yes

Enabling And Disabling ParkSense®

ParkSense® can be enabled and disabled with the ParkSense® switch, located on the switch panel below the Uconnect® display.

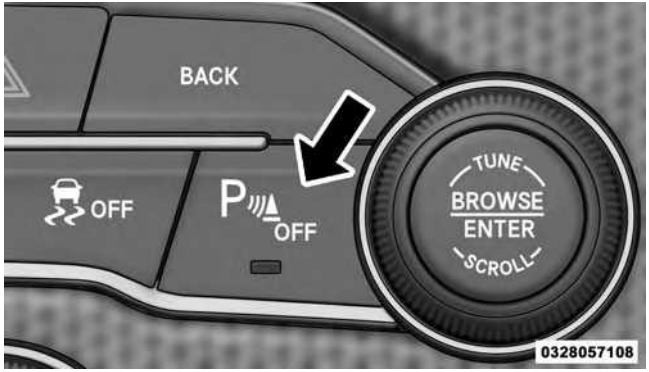

ParkSense® Switch

When the ParkSense® system is disabled, the Drivers Information Display (DID) will display the "PARKSENSE OFF" message for approximately five seconds. Refer to "Drivers Information Display (DID)" in "Understanding Your Instrument Panel" for further information. When the shift lever is moved to REVERSE and the system is disabled, the DID will display the "PARKSENSE OFF" message for as long as the vehicle is in REVERSE.

The ParkSense® switch LED will be ON when ParkSense® is disabled or defective. The ParkSense® switch LED will be OFF when the system is enabled. If the ParkSense switch is pushed and the system is disabled or requires service, the ParkSense switch LED will blink momentarily and then the LED will be ON.

Service The ParkSense® Rear Park Assist System

During vehicle start up, when the ParkSense® Rear Park Assist System has detected a faulted condition, the instrument cluster will actuate a single chime, once per ignition cycle and it will display the "PARKSENSE UNAVAILABLE WIPE REAR SENSORS" or "PARKSENSE UNAVAILABLE SERVICE REQUIRED" message for five seconds. Refer to "Driver Information Display (DID)" in "Understanding Your Instrument Panel" for further information.

When the shift lever is moved to REVERSE and the system has detected a faulted condition, the Driver Information Display (DID) will display the "PARKSENSE UNAVAILABLE WIPE REAR SENSORS" or "PARKSENSE UNAVAILABLE SERVICE REQUIRED" message for as long as the vehicle is in REVERSE. Under this condition, ParkSense® will not operate.

If "PARKSENSE UNAVAILABLE WIPE REAR SENSORS" appears in the Driver Information Display (DID), make sure the outer surface and the inside of the rear fascia/bumper is clean and clear of snow, ice, mud, dirt or other obstruction, and then cycle the ignition. If the message continues to appear see an authorized dealer.

If "PARKSENSE UNAVAILABLE SERVICE REQUIRED" appears in the DID, see an authorized dealer.

Cleaning The ParkSense® System

Clean the ParkSense® sensors with water, car wash soap and a soft cloth. Do not use rough or hard cloths. Do not scratch or poke the sensors. Otherwise, you could damage the sensors.

ParkSense® System Usage Precautions

NOTE:

- Ensure that the rear bumper is free of snow, ice, mud, dirt and debris to keep the ParkSense® system operating properly.
- Jackhammers, large trucks, and other vibrations could affect the performance of ParkSense® or render the system temporarily unavailable.
- When you turn ParkSense® off in DRIVE, the instrument cluster will display "PARKSENSE OFF" for five seconds. Furthermore, once you turn ParkSense® off, it remains off until you turn it on again, even if you cycle the ignition.
- When you move the shift lever to the REVERSE position and ParkSense® is turned off, the Driver Information Display (DID) will display "PARKSENSE OFF" message for as long as the vehicle is in REVERSE.
- ParkSense® will reduce the volume of the radio when it is sounding an audio tone.
- Clean the ParkSense® sensors regularly, taking care not to scratch or damage them. The sensors must not be covered with ice, snow, slush, mud, dirt or debris. Failure to do so can result in the system not working properly. The ParkSense® system might not detect an obstacle behind the fascia/bumper, or it could provide a false indication that an obstacle is behind the fascia/bumper.
- Ensure the ParkSense® system is OFF if objects such as bicycle carriers, trailer hitches, etc., are placed within 12 inches 30 (cm) from the rear fascia/bumper. Failure to do so can result in the system misinterpreting a close object as a sensor problem, causing the "PARKSENSE UNAVAILABLE SERVICE REQUIRED" message to be displayed in the Driver Information Display (DID).

CAUTION!

- **ParkSense® is only a parking aid and it is unable to recognize every obstacle, including small obstacles. Parking curbs might be temporarily detected or not detected at all. Obstacles located above or below the sensors will not be detected when they are in close proximity.**
- **The vehicle must be driven slowly when using ParkSense® in order to be able to stop in time when an obstacle is detected. It is recommended that the driver looks over his/her shoulder when using ParkSense®.**

WARNING!

Drivers must be careful when backing up even when using the Rear Park Assist system. Always check

(Continued)

WARNING! ***(Continued)***

carefully behind your vehicle, and be sure to check for pedestrians, animals, other vehicles, obstructions, or blind spots before backing up. You are responsible for the safety of your surroundings and must continue to pay attention while backing up. Failure to do so can result in serious injury or death.

PARKVIEW® REAR BACK UP CAMERA — IF EQUIPPED

Your vehicle may be equipped with the ParkView® Rear Back Up Camera that allows you to see an on-screen image of the rear surroundings of your vehicle whenever the shift lever/gear selector is put into REVERSE. The ParkView® camera is located on the rear of the vehicle above the rear license plate. The image will be displayed in the touchscreen display along with a caution note to

"check entire surroundings" across the top of the screen. After five seconds this note will disappear.

NOTE: The ParkView® Rear Back Up Camera has programmable modes of operation that may be selected through the Uconnect® System. Refer to "Uconnect® Settings" in "Understanding Your Instrument Panel" for further information.

If your vehicle is equipped with the Camera Delay feature and it is turned ON, the rear camera image will be displayed for up to 10 seconds when the vehicle is shifted out of REVERSE unless the forward vehicle speed exceeds 8 mph (13 km/h), the transmission is shifted into "PARK" or the vehicle's ignition is cycled to the OFF position.

When the Vehicle is shifted out of Reverse (with camera delay turned OFF) the rear camera mode is exited and the last touchscreen appears again.

When enabled, active guide lines are overlaid on the image to illustrate the width of the vehicle and its projected backup path based on the steering wheel position.

Different colored zones indicate the distance to the rear of the vehicle.

The following table shows the approximate distances for each zone:

Zone	Distance to the rear of the vehicle
Red	0 - 1 ft (0 - 30 cm)
Yellow	1 ft - 6.5 ft (30 cm - 2 m)
Green	6.5 ft or greater (2 m or greater)

WARNING!

Drivers must be careful when backing up even when using the ParkView® Rear Back Up Camera. Always check carefully behind your vehicle, and be sure to check for pedestrians, animals, other vehicles, obstructions, or blind spots before backing up. You are responsible for the safety of your surroundings and must continue to pay attention while backing up. Failure to do so can result in serious injury or death.

CAUTION!

- **To avoid vehicle damage, ParkView® should only be used as a parking aid. The ParkView® camera is unable to view every obstacle or object in your drive path.**

(Continued)

CAUTION! ***(Continued)***

- **To avoid vehicle damage, the vehicle must be driven slowly when using ParkView® to be able to stop in time when an obstacle is seen. It is recommended that the driver look frequently over his/her shoulder when using ParkView®.**

NOTE: If snow, ice, mud, or any foreign substance builds up on the camera lens, clean the lens, rinse with water, and dry with a soft cloth. Do not cover the lens.

OVERHEAD CONSOLE

The overhead console contains courtesy/reading lights and storage for sunglasses. Universal Garage Door Opener (HomeLink®) and power sunroof switches may also be included, if equipped.

Overhead Console

Front Map/Reading Lights — If Equipped

Lights are mounted in the overhead console. Each light can be turned on by pushing the switch on either side of the console. These buttons are backlit for night time visibility.

Front Map/Reading Lights

To turn the lights off, push the switch a second time. The lights also turn on when a door is opened. The lights will also turn on when the UNLOCK button on the RKE is pushed.

Front Map/Reading Light Switches

Courtesy Lights

The courtesy lights can be turned on by pushing the top corner of the lens. To turn the lights off, push the lens a second time.

Courtesy Lights

Sunglasses Bin Door

At the front of the console a compartment is provided for the storage of a pair of sunglasses. The storage compartment access is a “push/push” design. Push the chrome pad on the door to open. Push the chrome pad on the door to close.

Sunglasses Bin Door

GARAGE DOOR OPENER — IF EQUIPPED

HomeLink® replaces up to three hand-held transmitters that operate devices such as garage door openers, motorized gates, lighting or home security systems. The HomeLink® unit is powered by your vehicles 12 Volt battery.

The HomeLink® buttons, located on either the overhead console, headliner or sunvisor, designate the three different HomeLink® channels. The HomeLink® indicator is located above the center button.

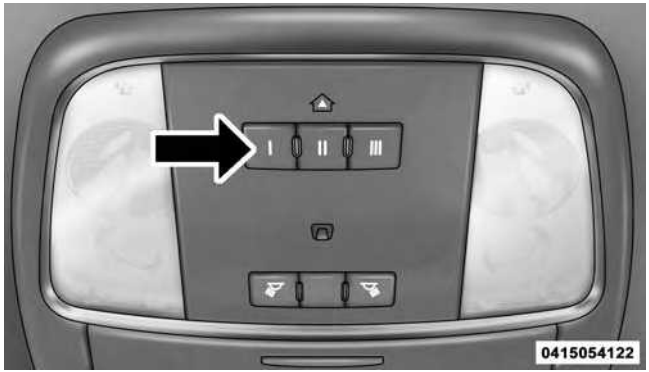

Overhead Console HomeLink® Buttons

NOTE: HomeLink® is disabled when the Vehicle Security Alarm is active.

Before You Begin Programming HomeLink®

Be sure that your vehicle is parked outside of the garage before you begin programming.

For more efficient programming and accurate transmission of the radio-frequency signal it is recommended that a new battery be placed in the hand-held transmitter of the device that is being programmed to the HomeLink® system.

To erase the channels place the ignition in the ON/RUN position and push and hold the two outside HomeLink® buttons (I and III) for up 20 seconds or until the red indicator flashes.

NOTE:

- Erasing all channels should only be performed when programming HomeLink® for the first time. Do not erase channels when programming additional buttons.
- If you have any problems, or require assistance, please call toll-free 1-800-355-3515 or, on the Internet at HomeLink.com for information or assistance.

Programming A Rolling Code

For programming garage door openers that were manufactured after 1995. These garage door openers can be identified by the "LEARN" or "TRAIN" button located where the hanging antenna is attached to the garage door opener. It is NOT the button that is normally used to open and close the door. The name and color of the button may vary by manufacturer.

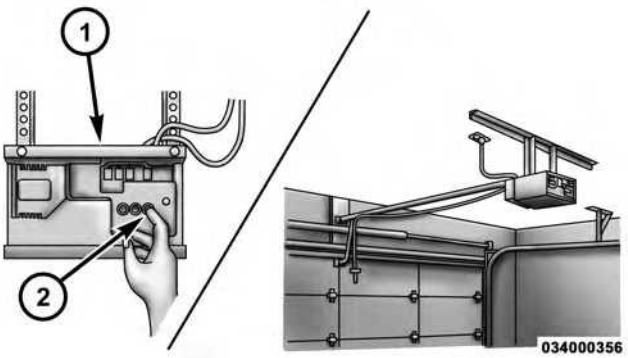

Training The Garage Door Opener

1 — Door Opener
2 — Training Button

1. Place the ignition in the ON/RUN position.

2. Place the hand-held transmitter 1 to 3 inches (3 to 8 cm) away from the HomeLink® button you wish to program while keeping the HomeLink® indicator light in view.
3. Push and hold the HomeLink® button you want to program while you push and hold the hand-held transmitter button.
4. Continue to hold both buttons and observe the indicator light. The HomeLink® indicator will flash slowly and then rapidly after HomeLink® has received the frequency signal from the hand-held transmitter. Release both buttons after the indicator light changes from slow to rapid.
5. At the garage door opener motor (in the garage), locate the "LEARN" or "TRAINING" button. This can usually be found where the hanging antenna wire is attached to the garage door opener/device motor. Firmly push and release the "LEARN" or "TRAINING" button. On some garage door openers/devices there may be a light that blinks when the garage door opener/device is in the LEARN/TRAIN mode.

NOTE: You have 30 seconds in which to initiate the next step after the LEARN button has been pushed.

6. Return to the vehicle and push the programmed HomeLink® button twice (holding the button for two seconds each time). If the garage door opener/device activates, programming is complete.

NOTE: If the garage door opener/device does not activate, push the button a third time (for two seconds) to complete the training.

To program the remaining two HomeLink® buttons, repeat each step for each remaining button. DO NOT erase the channels.

Reprogramming A Single HomeLink® Button (Rolling Code)

To reprogram a channel that has been previously trained, follow these steps:

1. Cycle the ignition to the ON/RUN position.
2. Push and hold the desired HomeLink® button until the indicator light begins to flash after 20 seconds. **Do not release the button.**
3. **Without releasing the button** proceed with "Programming A Rolling Code" step 2 and follow all remaining steps.

Programming A Non-Rolling Code

For programming Garage Door Openers manufactured before 1995.

1. Place the ignition in the ON/RUN position.
2. Place the hand-held transmitter 1 to 3 inches (3 to 8 cm) away from the HomeLink® button you wish to program while keeping the HomeLink® indicator light in view.
3. Push and hold the Homelink® button you want to program while you push and hold the hand-held transmitter button.
4. Continue to hold both buttons and observe the indicator light. The Homelink® indicator will flash slowly and then rapidly after HomeLink® has received the frequency signal from the hand-held transmitter. Release both buttons after the indicator light changes from slow to rapid.
5. Push and hold the programmed HomeLink® button and observe the indicator light.
   - If the indicator light stays on constantly, programming is complete and the garage door/device should activate when the HomeLink® button is pushed.

- To program the two remaining HomeLink® buttons, repeat each step for each remaining button. DO NOT erase the channels.

Reprogramming A Single HomeLink® Button (Non-Rolling Code)

To reprogram a channel that has been previously trained, follow these steps:

1. Cycle the ignition to the ON/RUN position.
2. Push and hold the desired HomeLink® button until the indicator light begins to flash after 20 seconds. **Do not release the button.**
3. **Without releasing the button** proceed with "Programming A Non-Rolling Code" step 2 and follow all remaining steps.

Canadian/Gate Operator Programming

For programming transmitters in Canada/United States that require the transmitter signals to "time-out" after several seconds of transmission.

Canadian radio frequency laws require transmitter signals to time-out (or quit) after several seconds of transmission – which may not be long enough for HomeLink® to pick up the signal during programming. Similar to this Canadian law, some U.S. gate operators are designed to time-out in the same manner.

It may be helpful to unplug the device during the cycling process to prevent possible overheating of the garage door or gate motor.

1. Cycle the ignition to the ON/RUN position.

2. Place the hand-held transmitter 1 to 3 inches (3 to 8 cm) away from the HomeLink® button you wish to program while keeping the HomeLink® indicator light in view.
3. Continue to push and hold the HomeLink® button, while you push and release ("cycle") your hand-held transmitter every two seconds until HomeLink® has successfully accepted the frequency signal. The indicator light will flash slowly and then rapidly when fully trained.
4. Watch for the HomeLink® indicator to change flash rates. When it changes, it is programmed. It may take up to 30 seconds or longer in rare cases. The garage door may open and close while you are programming.
5. Push and hold the programmed HomeLink® button and observe the indicator light.
   - If the indicator light stays on constantly, programming is complete and the garage door/device should activate when the HomeLink® button is pushed.
   - To program the two remaining HomeLink® buttons, repeat each step for each remaining button. DO NOT erase the channels.

If you unplugged the garage door opener/device for programming, plug it back in at this time.

Reprogramming A Single HomeLink® Button (Canadian/Gate Operator)

To reprogram a channel that has been previously trained, follow these steps:

1. Cycle the ignition to the ON/RUN position.
2. Push and hold the desired HomeLink® button until the indicator light begins to flash after 20 seconds. **Do not release the button.**
3. **Without releasing the button** proceed with "Canadian/Gate Operator Programming" step 2 and follow all remaining steps.

Using HomeLink®

To operate, push and release the programmed HomeLink® button. Activation will now occur for the programmed device (i.e., garage door opener, gate operator, security system, entry door lock, home/office lighting, etc.,). The hand-held transmitter of the device may also be used at any time.

Security

It is advised to erase all channels before you sell or turn in your vehicle.

To do this, push and hold the two outside buttons for 20 seconds until the red indicator flashes. Note that all channels will be erased. Individual channels cannot be erased.

The HomeLink® Universal Transceiver is disabled when the Vehicle Security Alarm is active.

Troubleshooting Tips

If you are having trouble programming HomeLink®, here are some of the most common solutions:

- Replace the battery in the original hand-held transmitter.
- Push the LEARN button on the Garage Door Opener to complete the training for a Rolling Code.
- Did you unplug the device for programming and remember to plug it back in?

If you have any problems, or require assistance, please call toll-free 1-800-355-3515 or, on the Internet at HomeLink.com for information or assistance.

WARNING!

- **Vehicle exhaust contains carbon monoxide, a dangerous gas. Do not run your vehicle in the garage while programming the transceiver. Exhaust gas can cause serious injury or death.**
- **Your motorized door or gate will open and close while you are programming the universal transceiver. Do not program the transceiver if people, pets or other objects are in the path of the door or gate. Only use this transceiver with a garage door opener that has a "stop and reverse" feature as required by Federal safety standards. This includes most garage door opener models manufactured after 1982. Do not use a garage door opener without these safety features. Call toll-free 1-800-355-3515 or, on the Internet at HomeLink.com for safety information or assistance.**

General Information

This device complies with FCC rules Part 15 and Industry Canada RSS-210. Operation is subject to the following two conditions:

1. This device may not cause harmful interference.
2. This device must accept any interference that may be received including interference that may cause undesired operation.

NOTE:

- The transmitter has been tested and it complies with FCC and IC rules. Changes or modifications not expressly approved by the party responsible for compliance could void the user's authority to operate the device.
- The term IC before the certification/registration number only signifies that Industry Canada technical specifications were met.

POWER SUNROOF — IF EQUIPPED

The power sunroof switch is located between the sun visors on the overhead console.

Power Sunroof Switch

WARNING!

- **Never leave children unattended in a vehicle, or with access to an unlocked vehicle. Never leave the Key Fob in or near the vehicle, or in a location accessible to children. Do not leave the ignition of a vehicle equipped with Keyless Enter-N-Go™ in the ACC or ON/RUN mode. Occupants, particularly unattended children, can become entrapped by the power sunroof while operating the power sunroof switch. Such entrapment may result in serious injury or death.**
- **In a collision, there is a greater risk of being thrown from a vehicle with an open sunroof. You could also be seriously injured or killed. Always fasten your seat belt properly and make sure all passengers are also properly secured.**

(Continued)

WARNING! *(Continued)*

- **Do not allow small children to operate the sunroof. Never allow your fingers, other body parts, or any object, to project through the sunroof opening. Injury may result.**

Opening Sunroof — Express

Push the switch rearward and release it within one-half second. The sunroof and sunshade will open automatically from any position. The sunroof and sunshade will open fully and stop automatically. This is called "Express Open". During Express Open operation, any movement of the sunroof switch will stop the sunroof.

Opening Sunroof — Manual Mode

To open the sunroof, push and hold the switch rearward to full open. Any release of the switch will stop the movement. The sunroof and sunshade will remain in a partially opened condition until the switch is pushed and held rearward again.

Closing Sunroof — Express

Push the switch forward and release it within one-half second and the sunroof will close automatically from any position. The sunroof will close fully and stop automatically. This is called "Express Close". During Express Close operation, any movement of the switch will stop the sunroof.

Closing Sunroof — Manual Mode

To close the sunroof, push and hold the switch in the forward position. Any release of the switch will stop the movement and the sunroof will remain in a partially closed condition until the switch is pushed and held forward again.

Pinch Protect Feature

This feature will detect an obstruction in the opening of the sunroof during Express Close operation. If an obstruction in the path of the sunroof is detected, the sunroof will automatically retract. Remove the obstruction if this occurs. Next, push the switch forward and release to Express Close.

NOTE: If three consecutive sunroof close attempts result in Pinch Protect reversals, the fourth close attempt will be a Manual Close movement with Pinch Protect disabled.

Venting Sunroof — Express

Push and release the Vent button within one half second and the sunroof will open to the vent position. This is called "Express Vent", and it will occur regardless of sunroof position. During Express Vent operation, any movement of the switch will stop the sunroof.

Sunshade Operation

The sunshade can be opened manually. However, the sunshade will open automatically as the sunroof opens.

NOTE: The sunshade cannot be closed if the sunroof is open.

Wind Buffeting

Wind buffeting can be described as the perception of pressure on the ears or a helicopter-type sound in the ears. Your vehicle may exhibit wind buffeting with the windows down, or the sunroof (if equipped) in certain open or partially open positions. This is a normal occurrence and can be minimized. If the buffeting occurs with the rear windows open, then open the front and rear windows together to minimize the buffeting. If the buffeting occurs with the sunroof open, then adjust the sunroof opening to minimize the buffeting or open any window.

Sunroof Maintenance

Use only a non-abrasive cleaner and a soft cloth to clean the glass panel.

Ignition Off Operation

NOTE:

- The power sunroof switch can remain active for up to approximately ten minutes after the vehicles ignition is placed to the Off position. Opening either front door will cancel this feature.
- This feature is programmable using the Uconnect® System. Refer to "Uconnect® Settings" in "Understanding Your Instrument Panel" for further information.

ELECTRICAL POWER OUTLETS

Your vehicle is equipped with one 12 Volt (13 Amp) power outlet on the instrument panel and one 12 Volt (10 Amp) power outlet in the center console that can be used to power cellular phones, small electronics and other low powered electrical accessories. The power outlets are labeled with either a "key" or a "battery" symbol to indicate how the outlet is powered. Power outlets labeled with a "key" are powered when the ignition switch is in the ON or ACC position, while the outlets labeled with a "battery" are connected directly to the battery and powered at all times.

NOTE:

- All accessories connected to the "battery" powered outlets should be removed or turned off when the vehicle is not in use to protect the battery against discharge.
- To ensure proper cigar lighter operation, a MOPAR® knob and element must be used.

The front power outlet is located inside the storage area on the center stack of the instrument panel.

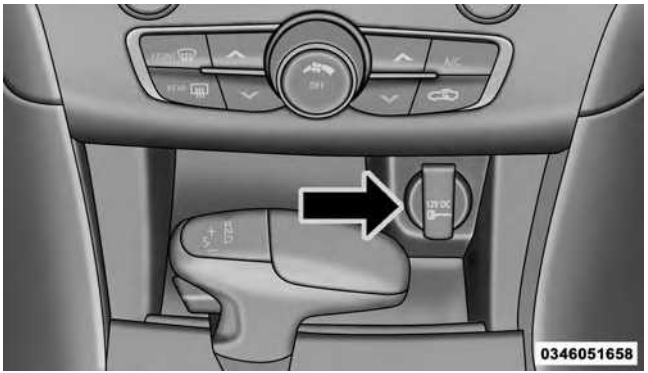

Front Power Outlet

WARNING!

Do not place ashes inside the cubby bin located on the center console on vehicles not equipped with the ash receiver tray. A fire leading to bodily injury could result.

In addition to the front power outlet, there is also a power outlet located in the storage area of the center console.

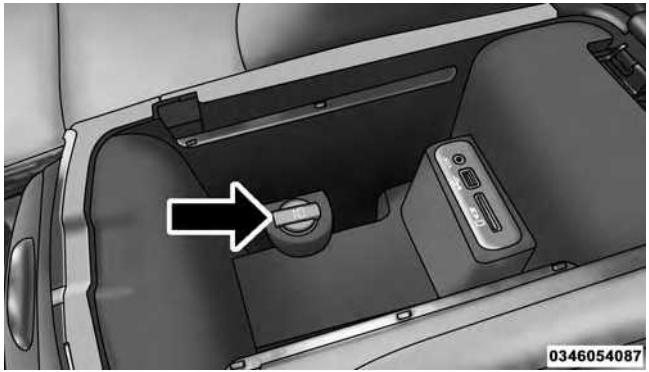

Center Console Power Outlet

NOTE: If the Media Hub is in use, do not exceed the maximum power of 100 Watts (8 Amps) for the center console power outlet. When the Media Hub is not in use, the outlet can deliver up to 120 Watts (10 Amps). If the power rating is exceeded, the fuse protecting the system will need to be replaced.

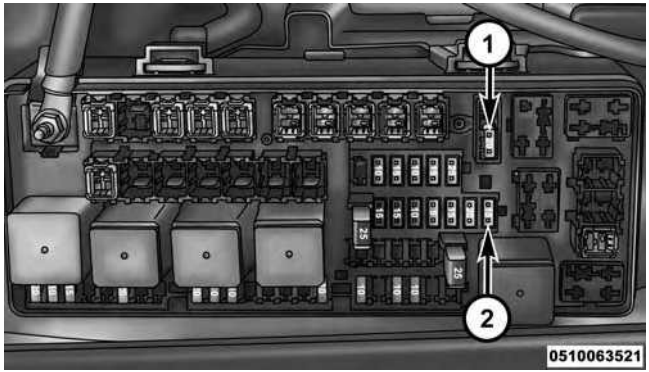

Power Outlet Fuse Locations

1 — #12 Fuse 20 Amp Yellow Instrument Panel Power Outlet/ Dual USB Charge Only Ports
2 — #38 Fuse 15 Amp Blue Center Console Power Outlet/Media Hub

NOTE: The instrument panel power outlet and dual rear console USB ports can be changed to "battery" powered all the time by moving the #12 20 Amp fuse from "IGN" to "B+". Refer to "Rear Power Distribution Center Cover" in "Rear Power Distribution Center (Fuses)".

WARNING!

To avoid serious injury or death:
- **Only devices designed for use in this type of outlet should be inserted into any 12 Volt outlet.**
- **Do not touch with wet hands.**
- **Close the lid when not in use and while driving the vehicle.**
- **If this outlet is mishandled, it may cause an electric shock and failure.**

CAUTION!

- **Many accessories that can be plugged in draw power from the vehicle's battery even when not in use (i.e., cellular phones, etc.). Eventually, if plugged in long enough, the vehicle's battery will discharge sufficiently to degrade battery life and/or prevent the engine from starting.**
- **Accessories that draw higher power (i.e., coolers, vacuum cleaners, lights, etc.) will degrade the battery even more quickly. Only use these intermittently and with greater caution.**
- **After the use of high power draw accessories or long periods of the vehicle not being started (with accessories still plugged in), the vehicle must be driven a sufficient length of time to allow the alternator to recharge the vehicle's battery.**

(Continued)

CAUTION! ***(Continued)***

- **Power outlets are designed for accessory plugs only. Do not hang any type of accessory or accessory bracket from the plug. Improper use of the power outlet can cause damage.**

CUPHOLDERS

Front Seat Cupholders

The cupholders are located in the forward edge of the center console.

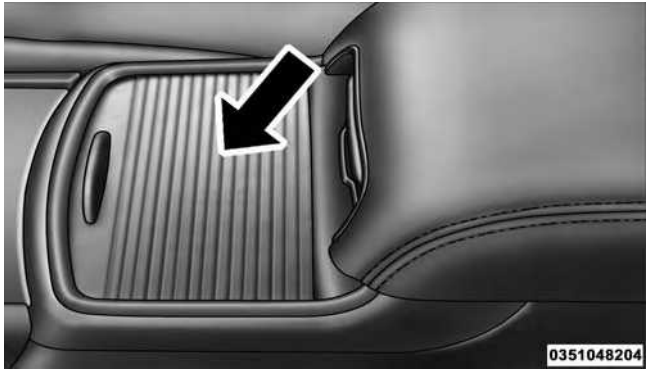

Retractable Cover

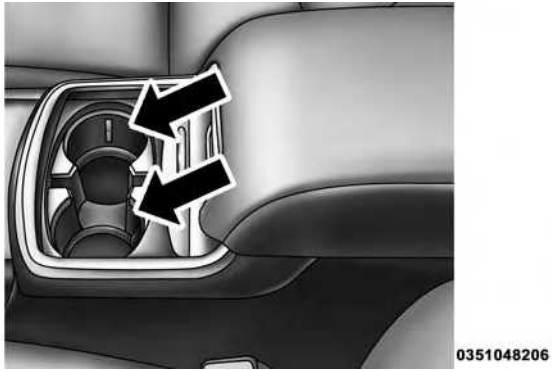

Front Cupholders

Rear Seat Cupholders

The rear seat cupholders are located in the center armrest between the rear seats. The cupholders are positioned forward in the armrest and side-by-side to provide convenient access to beverage cans or bottles while maintaining a resting place for the rear occupant's elbows.

Rear Seat Cupholders

Lighted Cupholders — If Equipped

On some vehicles the rear cupholders are equipped with a light ring that illuminates the cupholders for the rear passengers. The light ring is controlled by the Dimmer Control. Refer to "Lights" in "Understanding The Features Of Your Vehicle" for further information.

Light Ring In Rear Cupholder

STORAGE

Glove Compartment

The glove compartment is located on the passenger side of the instrument panel.

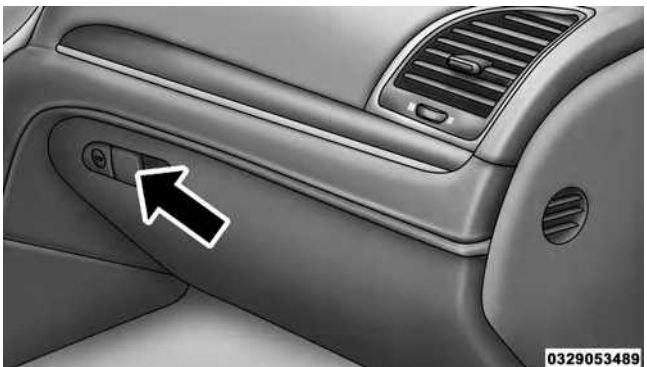

Glove Compartment

Console Features

There is an open cubby bin located forward of the shift lever.

Two separate storage compartments are also located underneath the center console armrest.

Center Console

Inside the center console armrest, there is a removable upper storage tray that can be slid forward/rearward on rails for access to the lower storage area. This tray has an integrated coin holder, along with additional area for small items like an ipod or phone. Below the upper tray, the lower storage compartment is made for larger items, like CDs and tissue boxes. In addition, the 12 Volt power outlet, USB and Aux jack are located here.

WARNING!

Do not operate this vehicle with a console compartment lid in the open position. Driving with the console compartment lid open may result in injury in a collision.

Door Storage

The door panels contain storage areas.

Front Door Trim Storage

Cargo Area — Vehicles Equipped With 60/40 Split-Folding Rear Seat

The 60/40 split-folding rear seat provides cargo-carrying versatility. The seatbacks fold down easily by pulling nylon tabs between the seatbacks and the bolsters. When the seats are folded down, they provide a continuous, nearly-flat extension of the load floor.

When the seatback is folded to the upright position, make sure it is latched by strongly pulling on the top of the seatback above the seat strap.

WARNING!

- **Be certain that the seatback is securely locked into position. If the seatback is not securely locked into position, the seat will not provide the proper stability for child seats and/or passengers. An improperly latched seat could cause serious injury.**
- **The cargo area in the rear of the vehicle (with the rear seatbacks in the locked-up or folded down position) should not be used as a play area by children when the vehicle is in motion. They could be seriously injured in a collision. Children should be seated and using the proper restraint system.**
- **To help protect against personal injury, passengers should not be seated in the rear cargo area. The rear cargo space is intended for load carrying purposes only, not for passengers, who should sit in seats and use seat belts.**

WARNING!

The weight and position of cargo and passengers can change the vehicle center of gravity and vehicle handling. To avoid loss of control resulting in personal injury, follow these guidelines for loading your vehicle:

- **Always place cargo evenly on the cargo floor. Put heavier objects as low and as far forward as possible.**
- **Place as much cargo as possible in front of the rear axle. Too much weight or improperly placed weight over or behind the rear axle can cause the rear of the vehicle to sway.**
- **Do not pile luggage or cargo higher than the top of the seatback. This could impair visibility or become a dangerous projectile in a sudden stop or collision.**

REAR WINDOW FEATURES

Rear Window Defroster

The rear window defroster button is located on the climate control. Push this button to turn on the rear window defroster and the heated outside mirrors (if equipped). An indicator in the button will illuminate when the rear window defroster is on. The rear window defroster automatically turns off after approximately 10 minutes. For an additional five minutes of operation, push the button a second time.

CAUTION!

Failure to follow these cautions can cause damage to the heating elements:

- **Use care when washing the inside of the rear window. Do not use abrasive window cleaners on the interior surface of the window. Use a soft cloth and a mild washing solution, wiping parallel to the heating elements. Labels can be peeled off after soaking with warm water.**
- **Do not use scrapers, sharp instruments, or abrasive window cleaners on the interior surface of the window.**
- **Keep all objects a safe distance from the window.**

LOAD LEVELING SYSTEM — IF EQUIPPED

The automatic load leveling system will provide a level-riding vehicle under most passenger and cargo loading conditions.

A hydraulic pump contained within the shock absorbers raises the rear of the vehicle to the correct height. It takes approximately 1 mile (1.6 km) of driving for the leveling to complete depending on road surface conditions.

If the leveled vehicle is not moved for approximately 15 hours, the leveling system will bleed itself down. The vehicle must be driven to reset the system.

UNDERSTANDING YOUR INSTRUMENT PANEL

CONTENTS

- INSTRUMENT PANEL FEATURES 260
- INSTRUMENT CLUSTER — BASE 261
- INSTRUMENT CLUSTER — PREMIUM 262
- INSTRUMENT CLUSTER DESCRIPTIONS 263
- DRIVER INFORMATION DISPLAY (DID) 272
  - Engine Oil Life Reset 275
  - Cruise Control. 277
  - DID Yellow Telltales. 277
  - DID Red Telltales 278
  - DID Selectable Menu Items 282
- Uconnect® SETTINGS 291
  - Buttons On The Faceplate. 293
  - Buttons On The Touchscreen. 293
  - Customer Programmable Features — Uconnect® 5.0 Settings 293
  - Customer Programmable Features — Uconnect® 8.4 Settings. 309
  - Performance Pages — If Equipped 330
  - Performance Control — If Equipped 339
- Uconnect® RADIOS — IF EQUIPPED 348

■ iPod®/USB/MP3 CONTROL 349

■ STEERING WHEEL AUDIO CONTROLS — IF EQUIPPED 350

□ Radio Operation 351

■ RADIO OPERATION AND MOBILE PHONES . .351

■ CLIMATE CONTROLS 352

□ Manual Climate Controls With Touchscreen — If Equipped 352

□ Climate Control Functions 358

□ Dual Zone Automatic Climate Controls With Touchscreen — If Equipped 360

□ Climate Control Functions 365

□ Automatic Temperature Control (ATC) 367

□ Operating Tips 368

■ Uconnect® VOICE RECOGNITION QUICK TIPS 371

□ Introducing Uconnect® 371

□ Get Started 372

□ Basic Voice Commands. 373

□ Radio 374

□ Media. 376

□ Phone. 377

□ Voice Text Reply 379

□ Climate (8.4A/8.4AN) 380

□ Navigation (8.4A/8.4AN) 381

□ Uconnect® Access* (8.4A/8.4AN) 382

□ Register (8.4A/8.4AN) 383

□ Mobile App (8.4A/8.4AN) 384
□ Voice Texting (8.4A/8.4AN) 385
□ Yelp® (8.4A/8.4AN). 386
□ SiriusXM Travel Link™ (8.4A/8.4AN) 387
□ Additional Information 388

INSTRUMENT PANEL FEATURES

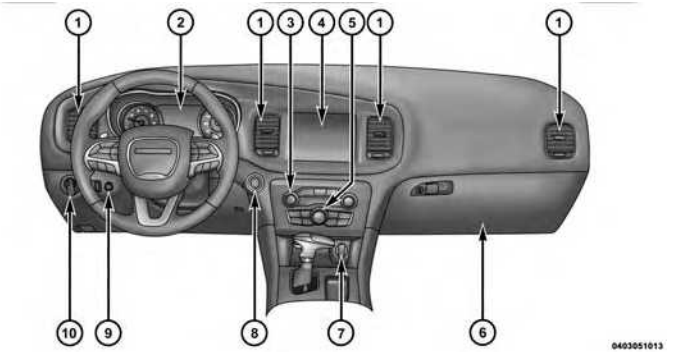

1 — Air Outlet
2 — Instrument Cluster
3 — Radio Controls — If Equipped
4 — Uconnect® System
5 — Climate Control Hard Controls
6 — Glove Box
7 — Power Outlet
8 — Ignition Start/Stop Button
9 — Trunk Release Button
10 — Headlight Switch

INSTRUMENT CLUSTER — BASE

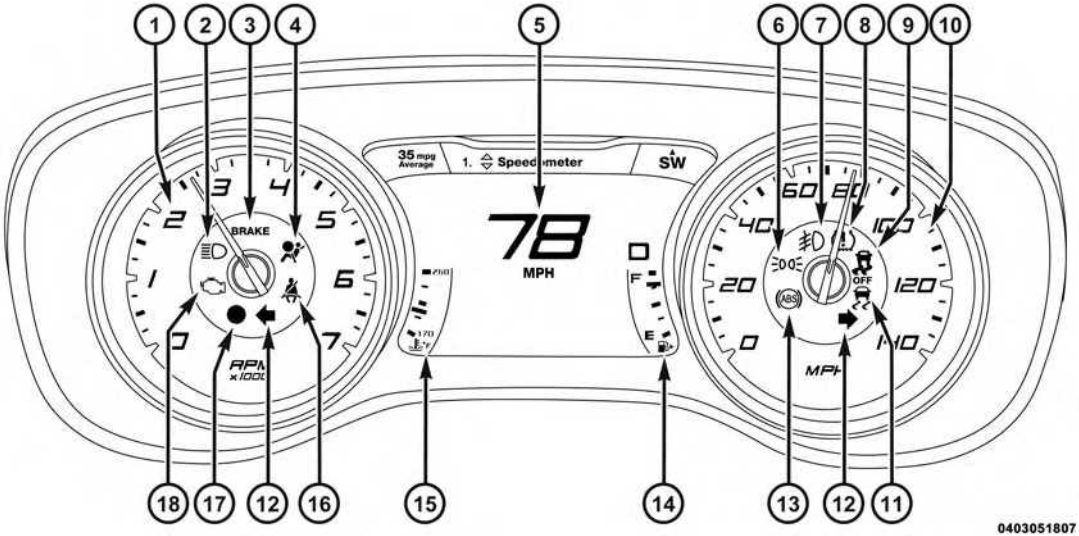

Instrument Cluster For 3.6L and 5.7L

INSTRUMENT CLUSTER — PREMIUM

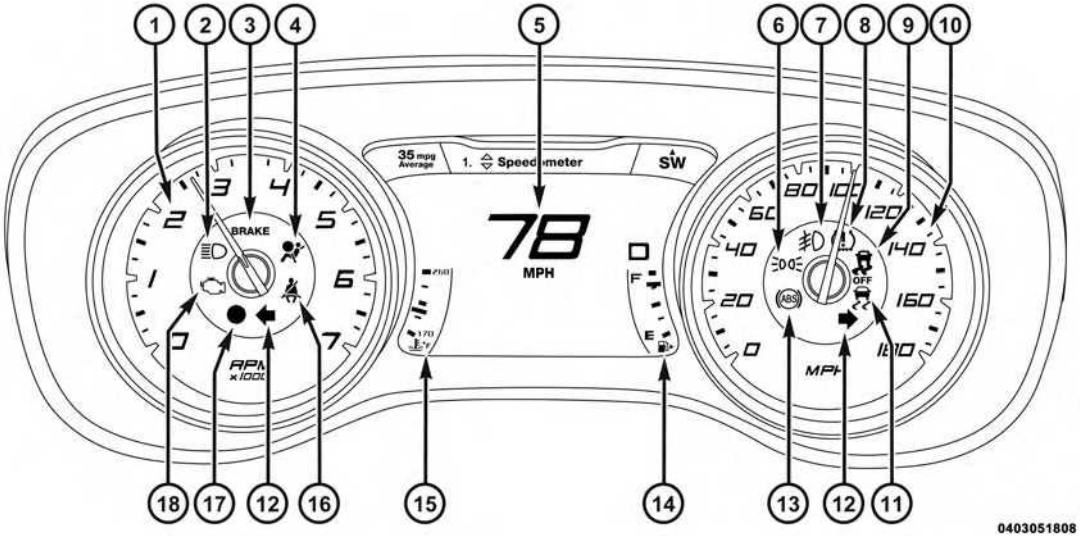

Instrument Cluster For 6.4L

INSTRUMENT CLUSTER DESCRIPTIONS

1. Tachometer

The red segments indicate the maximum permissible engine revolutions per minute (RPM x 1000) for each gear range. Ease up on the accelerator before reaching the red area. The transition of the red line starts 500 RPM prior to the actual redline. 6.2L SC redline = 6250 RPM and 6.4L redline = 6400 RPM.

2. High Beam Indicator

This indicator will turn on when the high beam headlights are on. Push the multifunction lever away from the steering wheel to switch the headlights to high beam.

3. Brake Warning Light

BRAKE

This light monitors various brake functions, including brake fluid level and parking brake application. If the brake light turns on, it may indicate that the parking brake is applied, that the brake fluid level is low, or that there is a problem with the anti-lock brake system reservoir.

If the light remains on when the parking brake has been disengaged, and the fluid level is at the full mark on the master cylinder reservoir, it indicates a possible brake hydraulic system malfunction. In this case, the light will remain on until the condition has been corrected.

The dual brake system provides a reserve braking capacity in the event of a failure to a portion of the hydraulic system. A leak in either half of the dual brake system is indicated by the Brake Warning Light which will turn on when the brake fluid level in the master cylinder has dropped below a specified level.

The light will remain on until the cause is corrected.

NOTE: The light may flash momentarily during sharp cornering maneuvers which change fluid level conditions. The vehicle should have service performed, and the brake fluid level checked.

If brake failure is indicated, immediate repair is necessary.

WARNING!

Driving a vehicle with the brake light on is dangerous. Part of the brake system may have failed. It will take longer to stop the vehicle. You could have a collision. Have the vehicle checked immediately.

Vehicles equipped with the Anti-Lock Brake System (ABS) are also equipped with Electronic Brake Force Distribution (EBD). In the event of an EBD failure, the Brake Warning Light will turn on along with the ABS Light. Immediate repair to the ABS system is required.

Operation of the Brake Warning Light can be checked by placing the ignition from the OFF position to the ON/RUN position. The light should illuminate for approximately two seconds. The light should then turn off unless the parking brake is applied or a brake fault is detected. If the light does not illuminate, have the light inspected by an authorized dealer.

The light also will turn on when the parking brake is applied with the ignition in the ON/RUN position.

NOTE: This light shows only that the parking brake is applied. It does not show the degree of brake application.

4. Air Bag Warning Light

This light will turn on for four to eight seconds as a bulb check when the ignition is first cycled to the ON/RUN position. If the light is either not on during starting, stays on, or turns on

while driving, have the system inspected at an authorized dealer as soon as possible. Refer to "Occupant Restraints" in "Things To Know Before Starting Your Vehicle" for further information.

5. Driver Information Display (DID) Area

The odometer display shows the total distance the vehicle has been driven. The trip odometer shows individual trip mileage.

NOTE: U.S. Federal regulations require that upon transfer of vehicle ownership, the seller certify to the purchaser the correct mileage that the vehicle has been driven. If your odometer needs to be repaired or serviced, the repair technician should leave the odometer reading the same as it was before the repair or service. If he/she cannot do so, then the odometer must be set at zero, and a sticker must be placed in the door jamb stating what the mileage was before the repair or service. It is a good idea for you to make a record of the odometer reading before the repair/service, so that you can be sure that it is properly reset, or that the door jamb sticker is accurate if the odometer must be reset at zero.

The DID features an interactive display. For further information, refer to "Driver Information Display (DID)."

6. Park/Headlight ON Indicator

This indicator will illuminate when the park lights or headlights are turned on.

7. Front Fog Light Indicator — If Equipped

This indicator will illuminate when the front fog lights are on.

8. Tire Pressure Monitoring Telltale Light

Each tire, including the spare (if provided), should be checked monthly when cold and inflated to the inflation pressure recommended by the vehicle manufacturer on the vehicle placard or tire inflation pressure label. (If your vehicle has tires of a different size than the size indicated on the vehicle placard or tire inflation pressure label, you should determine the proper tire inflation pressure for those tires).

As an added safety feature, your vehicle has been equipped with a Tire Pressure Monitoring System (TPMS) that illuminates a low tire pressure telltale when one or more of your tires is significantly under-inflated. Accordingly, when the low tire pressure telltale illuminates, you should stop and check your tires as soon as possible and inflate them to the proper pressure. Driving on a significantly under-inflated tire causes the tire to overheat and can lead to tire failure. Under-inflation also reduces fuel efficiency and tire tread life and may affect the vehicle's handling and stopping ability.

Please note that the TPMS is not a substitute for proper tire maintenance, and it is the driver's responsibility to maintain correct tire pressure, even if under-inflation has not reached the level to trigger illumination of the TPMS low tire pressure telltale.

Your vehicle has also been equipped with a TPMS malfunction indicator to indicate when the system is not operating properly. The TPMS malfunction indicator is

combined with the low tire pressure telltale. When the system detects a malfunction, the telltale will flash for approximately one minute and then remain continuously illuminated. This sequence will continue upon subsequent vehicle start-ups as long as the malfunction exists. When the malfunction indicator is illuminated, the system may not be able to detect or signal low tire pressure as intended. TPMS malfunctions may occur for a variety of reasons, including the installation of replacement or alternate tires or wheels on the vehicle that prevent the TPMS from functioning properly. Always check the TPMS malfunction telltale after replacing one or more tires or wheels on your vehicle, to ensure that the replacement or alternate tires and wheels allow the TPMS to continue to function properly.

CAUTION!

The TPMS has been optimized for the original equipment tires and wheels. TPMS pressures and warning have been established for the tire size equipped on your vehicle. Undesirable system operation or sensor damage may result when using replacement equipment that is not of the same size, type, and/or style. Aftermarket wheels can cause sensor damage. Using aftermarket tire sealants may cause the Tire Pressure Monitoring System (TPMS) sensor to become inoperable. After using an aftermarket tire sealant it is recommended that you take your vehicle to an authorized dealership to have your sensor function checked.

9. Electronic Stability Control (ESC) OFF Indicator Light — If Equipped

This light indicates the Electronic Stability Control (ESC) is off.

With Drive Modes, the ESC OFF indicator will be lit any time the Traction modes is set to Sport, Track, or Full OFF.

10. Speedometer

Indicates vehicle speed.

11. Electronic Stability Control (ESC) Activation/ Malfunction Indicator Light

The "ESC Activation/Malfunction Indicator Light" in the instrument cluster will come on when the ignition is placed in the ON/RUN position. It should go out with the engine running. If the "ESC Activation/Malfunction Indicator Light" comes on continuously with the engine running, a malfunction has been detected in the ESC system. If this light remains on after several ignition cycles, and the vehicle has been driven several miles (kilometers) at speeds greater than 30 mph (48 km/h), see your authorized dealer as soon as possible to have the problem diagnosed and corrected.

NOTE:

- The "ESC Off Indicator Light" and the "ESC Activation/Malfunction Indicator Light" will come on momentarily each time the ignition is placed in the ON/RUN position.
- Each time the ignition is placed in the ON/RUN position, the ESC system will be ON, even if it was turned off previously.
- The ESC system will make buzzing or clicking sounds when it is active. This is normal; the sounds will stop when ESC becomes inactive following the maneuver that caused the ESC activation.

12. Turn Signal Indicators

The arrow will flash with the exterior turn signal when the turn signal lever is operated.

NOTE:

- A continuous chime will sound if the vehicle is driven more than 1 mile (1.6 km) with either turn signal on.
- Check for an inoperative outside light bulb if either indicator flashes at a rapid rate.

13. Anti-Lock Brake (ABS) Light

This light monitors the Anti-Lock Brake System (ABS). The light will turn on when the ignition is placed in the ON/RUN position and may stay on for as long as four seconds.

If the ABS light remains on or turns on while driving, then the Anti-Lock portion of the brake system is not functioning and service is required. However, the conventional brake system will continue to operate normally if the BRAKE warning light is not on.

If the ABS light is on, the brake system should be serviced as soon as possible to restore the benefits of Anti-Lock Brakes. If the ABS light does not turn on when the ignition is placed in the ON/RUN position, have the light inspected by an authorized dealer.

14. Fuel Gauge

The pointer shows the level of fuel in the fuel tank when the ignition is placed in the ON/RUN position.

15. Temperature Gauge

The temperature gauge shows engine coolant temperature. Any reading within the normal range for a fully warm vehicle should be 200 F - 230 F which indicates that the engine cooling system is operating satisfactorily.

The gauge pointer will likely indicate a higher temperature when driving in hot weather, up mountain grades, or when towing a trailer. It should not be allowed to exceed the upper limits of the normal operating range.

CAUTION!

Driving with a hot engine cooling system could damage your vehicle. If the temperature gauge reads "H," pull over and stop the vehicle. Idle the vehicle with the air conditioner turned off until the pointer drops back into the normal range. If the pointer remains on the "H," and you hear a chime, turn the engine OFF immediately and call for service.

WARNING!

A hot engine cooling system is dangerous. You or others could be badly burned by steam or boiling coolant. You may want to call a service center if your vehicle overheats. If you decide to look under the hood yourself, refer to "Maintaining Your Vehicle" and follow the warnings under the Cooling System Pressure Cap paragraph.

16. Seat Belt Reminder Light

This light will turn on for four to eight seconds as a bulb check when the ignition is first placed in ON/RUN position. A chime will sound if the driver's seat belt is unbuckled during the bulb check. The Seat Belt Warning Light will flash or remain on continuously if the driver's seat belt remains unbuckled after the

bulb check or when driving. Refer to "Occupant Restraints" in "Things To Know Before Starting Your Vehicle" for further information.

17. Vehicle Security Light — If Equipped

This light will flash at a fast rate for approximately 15 seconds when the vehicle security alarm is arming, and then will flash slowly until the vehicle is disarmed.

18. Malfunction Indicator Light (MIL)

The Malfunction Indicator Light (MIL) is part of an onboard diagnostic system called OBD. The OBD system monitors engine and automatic transmission control systems. The MIL will turn on when the ignition is in the ON/RUN position before engine start. If the MIL does not come on when turning the key from OFF to ON/RUN, have the condition checked promptly.

Certain conditions, such as a loose or missing gas cap, poor fuel quality, etc., may illuminate the MIL after engine start. The vehicle should be serviced if the MIL stays on through several of your typical driving cycles. In most situations, the vehicle will drive normally and will not require towing.

CAUTION!

Prolonged driving with the Malfunction Indicator Light (MIL) on could cause damage to the engine control system. It also could affect fuel economy and driveability. If the MIL is flashing, severe catalytic converter damage and power loss will soon occur. Immediate service is required.

WARNING!

A malfunctioning catalytic converter, as referenced above, can reach higher temperatures than in normal operating conditions. This can cause a fire if you drive slowly or park over flammable substances such as dry plants, wood, cardboard, etc. This could result in death or serious injury to the driver, occupants or others.

DRIVER INFORMATION DISPLAY (DID)

The Driver Information Display (DID) features an interactive display which is located in the instrument cluster.

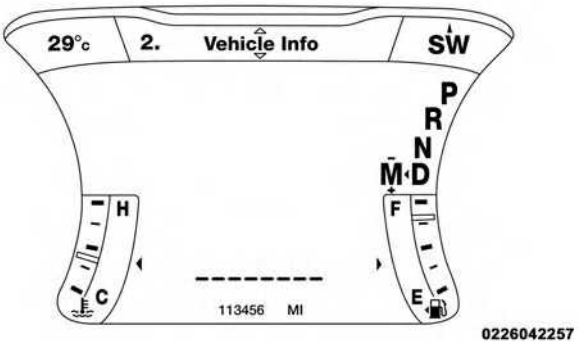

Driver Information Display (DID) Display

This system conveniently allows the driver to select a variety of useful information by pushing the arrow buttons located on the left side of the steering wheel. The DID Menu Items consists of the following:

- Speedometer

- Vehicle Info
- Performance
- Driver Assist — If Equipped
- Fuel Economy
- Trip
- Audio
- Messages
- Screen Setup
- Speed Warning — If Equipped
- Diagnostics — If Equipped
- Performance Shift Indicator (PSI) — If Equipped

The system allows the driver to select information by pushing the following buttons mounted on the steering wheel:

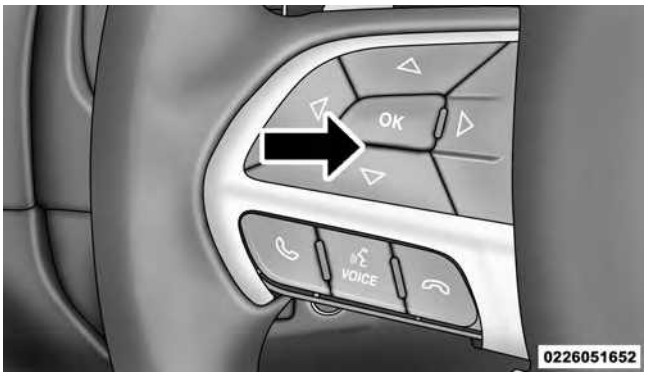

DID Controls

Up And Down Arrow Buttons:

△ Using the Up or Down arrows allows you to cycle through the Main Menu Items.

▽ Changes the Main Screen area and Menu Title area.

Left And Right Arrow Buttons:

◁ Using the Left or Right arrow buttons allows you to cycle through the submenu items of the Main menu item.

▷ **NOTE:**

- Holding the Up/Down or Left/Right arrow buttons will loop the user through the currently selected menu or options presented on the screen.
- Main menu and submenu's wrap for continuous scrolling.
- Upon returning to a main menu, the last submenu screen viewed within that main menu will be displayed.

OK Button:

For Digital Speedometer

- Pushing the OK button changes units (MPH or km/h).

For Screen Setup and Vehicle Settings:

- OK button allows user to enter menu and submenus.
- Within each submenu layer, the up/down arrows will allow the user to select the item of interest.
- Pushing the OK button makes the selection and a confirmation screen will appear (returning the user to the 1st page of the submenu).

- Pushing the left arrow button will exit each submenu layer and return to the main menu.

For the Trip and Fuel Economy menus (and new Performance Timers):

- Information is reset by pushing and holding the OK button.

Engine Oil Life Reset

Oil Change Required

Your vehicle is equipped with an engine oil change indicator system. The "Oil Change Required" message will display in the DID for five seconds after a single chime has sounded, to indicate the next scheduled oil change interval. The engine oil change indicator system is duty cycle based, which means the engine oil change interval may fluctuate, dependent upon your personal driving style.

Unless reset, this message will continue to display each time you place the ignition in the ON/RUN position. To turn off the message temporarily, push and release the OK button. To reset the oil change indicator system (after performing the scheduled maintenance), refer to the following procedure.

Vehicles Equipped With Keyless Enter-N-Go™

1. Without pushing the brake pedal, push the ENGINE START/STOP button and place the ignition to the ON/RUN position (do not start the engine).
2. Fully push the accelerator pedal, slowly, three times within 10 seconds.
3. Without pushing the brake pedal, push the ENGINE START/STOP button once to return the ignition to the OFF/LOCK position.

NOTE: If the indicator message illuminates when you start the vehicle, the oil change indicator system did not reset. If necessary, repeat this procedure.

Secondary Method Of Navigating To The Oil Life Screen In The DID And Holding Ok

Your vehicle is equipped with an engine oil change indicator system. The "Oil Change Required" message will flash in the DID display for approximately 10 seconds after a single chime has sounded to indicate the next scheduled oil change interval. The engine oil change indicator system is duty cycle based, which means the engine oil change interval may fluctuate, dependent upon your personal driving style.

Use the steering wheel DID controls for the following procedure(s):

1. Without pushing the brake pedal, place the ignition in the ON/RUN position (do not start the engine).
2. Push and release the **DOWN** arrow button to scroll downward through the main menu to " **Vehicle Info**."
3. Push and release the **RIGHT** arrow button to access the "Oil Life" screen.
4. Push and hold the **OK** button until the " **Oil Life**" screen displays.
5. Push and release the **DOWN** arrow button to select " **Yes**," then push and release the **OK** button to select reset of the Oil Life.
6. Push and release the **Up** arrow button to exit the submenu screen.

NOTE: If the indicator message illuminates when you start the vehicle, the oil change indicator system did not reset. If necessary, repeat this procedure.

Cruise Control

This area will show reconfigurable white caution telltales. These telltales include:

- *Cruise Ready*

This telltale will illuminate white to indicate that the Adaptive Cruise Control system is activated.

- *Electronic Speed Control SET*

This telltale will illuminate green when the electronic speed control is SET. For further information, refer to "Electronic Speed Control" in "Understanding The Features Of Your Vehicle."

DID Yellow Telltales

This area will show reconfigurable amber caution telltales. These telltales include:

- *Service Forward Collision Warming — If Equipped*

This light warns the driver of a potential collision with the vehicle in front and prompts the driver to take action in order to avoid the collision. For further information, refer to "Adaptive Cruise Control (ACC)" in "Understanding The Features Of Your Vehicle."

- *Windshield Washer Fluid Low Indicator*

This telltale will turn on to indicate the windshield washer fluid is low.

- *Service Adaptive Cruise Control — If Equipped*

This light will turn on when a ACC is not operating and needs service. For further information, refer to "Adaptive Cruise Control (ACC)" in "Understanding The Features Of Your Vehicle."

- *LaneSense Failure Telltale*

This telltale will turn on to indicate that the LaneSense Departure has detected a failure.

- *Service AWD Indicator*

This telltale will turn on to indicate the All Wheel Drive (AWD) system is not functioning properly and that service is required.

DID Red Telltales

This area will show reconfigurable red caution telltales. These telltales include:

- *Power Steering System Over Temperature — If Equipped*

If the "SERVICE POWER STEERING" message and a steering wheel icon are displayed on the DID screen, it indicates that the vehicle needs to be taken to the dealer for service. It is likely the vehicle has lost power steering assistance. Refer to "Power Steering" in "Starting And Operating" for further information.

NOTE:

- Even if power steering assistance is no longer operational, it is still possible to steer the vehicle. Under these conditions there will be a substantial increase in steering effort, especially at very low vehicle speeds and during parking maneuvers.
- If the condition persists, see your authorized dealer for service.

- *Door Ajar*

This light will turn on to indicate that one or more doors may be ajar.

- *Decklid Ajar*

This light will turn on to indicate the decklid may be ajar.

- *Oil Pressure Warning Light*

This light indicates low engine oil pressure. The light should turn on momentarily when the engine is started. If the light turns on while driving, stop the vehicle and shut off the engine as soon as possible. A chime will sound for four minutes when this light turns on.

Do not operate the vehicle until the cause is corrected. This light does not show how much oil is in the engine. The engine oil level must be checked under the hood.

- *Charging System Light*

This light shows the status of the electrical charging system. If the light stays on or comes on while driving, turn off some of the vehicle's non-essential electrical devices or increase engine speed (if at idle). If the charging system light remains on, it means that the

vehicle is experiencing a problem with the charging system. OBTAIN SERVICE IMMEDIATELY. See an authorized dealer.

If jump starting is required, refer to "Jump Starting Procedures" in "What To Do In Emergencies."

- *Electronic Throttle Control (ETC) Light*

This light informs you of a problem with the Electronic Throttle Control (ETC) system. The light will come on when the ignition is first turned ON and remain on briefly as a bulb check. If the light does not come on during starting, have the system checked by an authorized dealer.

If a problem is detected, the light will come on while the engine is running. Cycle the ignition key when the vehicle has completely stopped and the shift lever is placed in the PARK position. The light should turn off.

If the light remains lit with the engine running, your vehicle will usually be drivable. However, see an authorized dealer for service as soon as possible. If the light is flashing when the engine is running, immediate service is required. You may experience reduced performance, an elevated/rough idle or engine stall, and your vehicle may require towing.

- *Oil Temperature Warning Light*

This telltale indicates engine oil temperature is high. If the light turns on while driving, stop the vehicle and shut off the engine as soon as possible.

- *Air Bag Warning Light*

This light will turn on for four to eight seconds as a bulb check when the ignition switch is first turned to the ON/RUN position. If the light is either not on during starting, stays on, or turns

on while driving, have the system inspected at an authorized dealer as soon as possible. Refer to "Occupant Restraints" in "Things To Know Before Starting Your Vehicle" for further information.

- *Speed Limit Warning Light*

Push and release the UP or DOWN arrow button until the Speed Limit Warning Menu icon/title is highlighted in the DID. Push and release OK to enter speed warning. Use UP or DOWN arrow to select a desired speed, then push and release OK to set the speed. The Manual Speed Assist (MSA) Speed Warning telltale will display in the DID, and a chime will sound with a pop up warning message when the set speed is exceeded.

- *Transmission Temperature Warning Light*

This light indicates that there is excessive transmission fluid temperature that might occur with severe usage such as trailer towing. It may also occur when operating the vehicle in a high torque converter slip condition. If this light comes on, stop the vehicle and run the engine at idle or faster with the transmission in NEUTRAL until the light goes off.

CAUTION!

Continuous driving with the Transmission Temperature Warning Light illuminated will eventually cause severe transmission damage or transmission failure.

WARNING!

If you continue operating the vehicle when the Transmission Temperature Warning Light is illuminated you could cause the fluid to boil over, come in contact with hot engine or exhaust components and cause a fire.

DID Selectable Menu Items

Push and release the UP or DOWN arrow buttons until the desired Selectable Menu item is displayed in the DID.

Follow the Menu or submenu prompts as desired.

Speedometer

Push and release the UP or DOWN arrow button until the Speedometer menu is displayed in the DID. Push and release the OK button to toggle units (km/h or mph) of digital speedometer.

Vehicle Info

Push and release the UP or DOWN arrow button until the Vehicle Info menu is displayed in the DID. Push and release the RIGHT arrow button to enter the submenus items of Vehicle Info. Follow the directional prompts to access or reset any of the following Vehicle Info submenu items:

Tire Pressure Monitor

Coolant Temp

Trans Temp

Oil Temp

Oil Pressure

Oil Life

Battery Voltage

AWD Status — If Equipped

Air Intake Temp — If Equipped

Engine Torque — If Equipped

Engine Power — If Equipped

Air-Fuel Ratio— If Equipped

Boost — If Equipped

Intercooler Water Temp — If Equipped

Engine Hours Idle Hours — If Equipped

Performance Features

WARNING!

Measurement of vehicle statistics with the Performance Features is intended for off-highway or off-road use only and should not be done on any public roadways. It is recommended that these features be used in a controlled environment and within the limits of the law. The capabilities of the vehicle as measured by the performance pages must never be exploited in a reckless or dangerous manner, which can jeopardize the user's safety or the safety of others. Only a safe, attentive, and skillful driver can prevent accidents.

Refer to "Driver Information Display (DID)" in " Understanding Your Instrument Panel" for Main Menu/Sub-Menu selectable items and navigation.

The Performance Features include the following:

- 0-60 mph (0-100 km/h) Timer
  - Best
  - Last
  - Current
  - Reaction Timer
- 0-100 mph (0-161 km/h) Timer
  - Best
  - Last
  - Current
  - Reaction Timer
- 1/8 Mile (200 meters) Timer
  - Best
  - Last
  - Current
  - Reaction Timer

- 1/4 Mile (400 meters) Timer
  - Best
  - Last
  - Current
  - Reaction Timer
- Braking Distance
  - Distance
  - From Speed
- Current G-Forces
- Peak G-Forces
- Lap Timer
- Lap History
  - Will list the last 5 lap with the best lap highlighted in green.
- Top Speed

The following describes each feature and its operation:

0-60 mph (0-100 km/h)

When selected, this screen displays the time it takes for the vehicle to go from 0 to 60 mph (0 to 100 km/h) within 10 seconds.

- The feature will "ready" when the vehicle speed is at 0 mph (0 km/h). The word "READY" will flash when conditions are met for the event to begin.
- Dashes will display if the vehicle fails to reach 60 mph (100 km/h) in less then 10 seconds.
- To clear the vehicle's best, last, and current 0-60 mph (0-100 km/h) time, push and hold the **OK** button for two seconds.

0 to 100 mph (0 to 161 km/h)

When selected, this screen displays the time it takes for the vehicle to go from 0 to 100 mph (0 to 161 km/h) within 20 seconds.

- The feature will "ready" when the vehicle speed is at 0 mph (0 km/h). The word "READY" will flash when conditions are met for the event to begin.
- Dashes will display if the vehicle fails to reach 0 to 100 mph (0 to 161 km/h) in less then 20 seconds.
- To clear the vehicle's best, last and current 0 to 100 mph (0 to 161 km/h) time, push and hold the **OK** button for two seconds.

1/8 Mile (200 Meters)

When selected, this screen displays the time it takes the vehicle to travel 1/8 mile within 15 seconds and the vehicle's speed when it reaches 1/8 mile.

- The feature will "ready" when the vehicle is at 0 mph (0 km/h). The word "READY" will flash when conditions are met for the event to begin.
- Dashes will display if the vehicle fails to reach 1/8 mile (200 meters) in less then 15 seconds.
- To clear the vehicle's best 1/8 mile (200 meters) run, push and hold the **OK** button for five seconds.

1/4 Mile (400 Meters)

When selected, this screen displays the time it takes the vehicle to travel 1/4 mile within 25 seconds and the vehicle's speed when it reaches 1/4 mile (200 meters).

- The feature will "ready" when the vehicle is at 0 mph (0 km/h). The word "READY" will flash when conditions are met for the event to begin.
- Dashes will display if the vehicle fails to reach 1/4 mile (400 meters) in less then 25 seconds.

- To clear the vehicle's best 1/4 mile 400 meters) run, push and hold the **OK** button for two seconds.

Braking Distance

When selected, this screen displays the vehicle's braking distance, and the speed at which the brake pedal was depressed.

- This feature will only function when applying the brakes at speeds above 30 mph (48 km/h).
- Engaging the parking brake will disable this feature.
- The word "READY" will display when conditions are met for the event to begin.
- The distance and speed measurements display while the event is taking place.
- The distance measurement will be aborted if the brake pedal is released before the vehicle comes to a complete stop.
- Pushing and holding the **OK** button will clear the current and last run values.

Current G-Force

When selected, this screen displays the current G-Force (lateral and longitudinal) that displays the directions of the forces.

Peak G-Force

When selected, this screen displays all four G-Force values (two lateral and two longitudinal).

- When a force greater than zero is measured, the display will update the value as it climbs. As the G-Force falls, the peak forces will continue to display.
- Push and hold the **OK** button to clear the peak force values.

Lap Timer

When selected, the Lap Timer page will show the timer always at 0:00.00 with the previous Best and Last time data (unless the driver has cleared it via hold to Reset).

- Pushing **OK** will start "current" timer from 0:00.0.
- When **OK** is pushed, the times are updated accordingly.
- As soon as the driver exits the Lap Timer pages, the "current" timer will stop and the time will be reset to 0:00.00.
- If the driver stays on the Lap Timer pages, the "current" timer will reset to 0:00.0 when ignition is placed in the off position, or ignition placed in the ON position (or will roll over at 59:59.99 if ever possible).
- Each time the driver pushes **OK** for a Lap that current time populates, the Last time and also populates the 1st (top) space on the Timer History page the current time resets to 0:00.0 at every push of the **OK** button.
- The timer will stop when the driver navigates away from this page.

Lap History

When selected, this screen displays the Lap History, and will color highlight the time that is the best time from the Timer Page.

- Each time the driver presses the OK button (while on the Lap Timer page) the current Lap Time populates the 1st spot and the rest of the data shifts down.
- Color will indicate the time that is the best time from the Timer Page.
- Holding the **OK** button only resets the page you are on.
- Lap History page is a static display of lap times only.

Top Speed

When selected, this screen displays the Top Speed since last reset:

- Populates a top speed from first drive cycle and every time that speed is exceeded that number is stored here unless/until the driver resets the screen.
- Latching over ignition cycles.
- Units will change with the global change in units.

Driver Assist — If Equipped

Adaptive Cruise Control (ACC) Menu

The DID displays the current ACC system settings. The information displayed depends on ACC system status.

Push the ADAPTIVE CRUISE CONTROL (ACC) ON/OFF button (located on the steering wheel) until one of the following displays in the DID:

Adaptive Cruise Control Off

When ACC is deactivated, the display will read "Adaptive Cruise Control Off."

Adaptive Cruise Control Ready

When ACC is activated but the vehicle speed setting has not been selected, the display will read "Adaptive Cruise Control Ready."

Push the SET + or the SET- button (located on the steering wheel) and the following will display in the DID:

ACC SET

When ACC is set, the set speed will display in the instrument cluster.

The ACC screen may display once again if any ACC activity occurs, which may include any of the following:

- Distance Setting Change
- System Cancel
- Driver Override
- System Off
- ACC Proximity Warning
- ACC Unavailable Warning
- The DID will return to the last display selected after five seconds of no ACC display activity.

For further information, refer to "Adaptive Cruise Control (ACC) — If Equipped" in "Understanding The Features Of Your Vehicle."

LaneSense — If Equipped

The DID displays the current LaneSense system settings. The information displayed depends on LaneSense system status and the conditions that need to be met. For further information, refer to "LaneSense — If Equipped" in "Understanding The Features Of Your Vehicle."

Fuel Economy

Push and release the UP or DOWN arrow button until the Fuel Economy Menu item is highlighted in the DID.

- Two sub menu pages one with Current value displayed and one without the Current Value displayed:
  - Current MPG (or L/100 km)
  - Range (miles or km)
  - Average MPG (or L/100 km)
  - The Max and Min values will correspond to the particular engine requirements

- Lower end of gauge will be displayed in an amber color and turn green as Fuel Economy improves.
- MPG will have the gauge fill from the left (clockwise).
- L/100 km will have the gauge fill from the right (counter clockwise).
- Hold **OK** to reset average fuel economy information.

Trip Info

Push and release the UP or DOWN arrow button until the Trip Menu item is highlighted in the DID (Toggle left or right to select Trip A or Trip B). The Trip information will display the following:

- Distance
- Average Fuel Economy
- Elapsed Time

Hold the OK button to reset feature information.

Audio

Push and release the UP or DOWN arrow button until the Audio Menu displays in the DID.

Stored Messages

Push and release the UP or DOWN arrow button until the Messages Menu item is highlighted in the DID. This feature shows the number of stored warning messages. Pushing the RIGHT arrow button will allow you to see what the stored messages are.

Screen Setup

Push and release the UP or DOWN arrow button until the Screen Setup Menu displays in the DID. Push and release the OK button to enter the sub-menus. The Screen Setup feature allows you to change what information is displayed in the instrument cluster as well as the location that information is displayed.

Performance Shift Indicator (PSI) – If Equipped

The Performance Shift Indicator (PSI) is enabled on vehicles with manual transmission, or when a vehicle with automatic transmission is in manual shift mode. The PSI provides the driver with a visual indication within the DID display when the driver configured gear shift point has been reached and the driver is still accelerating. This indication notifies the driver to change gear corresponding to the configured RPMs in the head unit. When the shift up indicator is shown on the display, the PSI is advising the driver to engage a higher gear.

The PSI indicator in the DID display remains illuminated until the driver changes gear, or the driving conditions return to a situation where changing gear is not required, corresponding to the configured RPMs in the head unit.

Uconnect® SETTINGS

The Uconnect® system uses a combination of buttons on the touchscreen and buttons on the faceplate located on the center of the instrument panel that allows you to access and change the customer programmable features.

CAUTION!

Do NOT attach any object to the touchscreen, doing so can result in damage to the touchscreen.

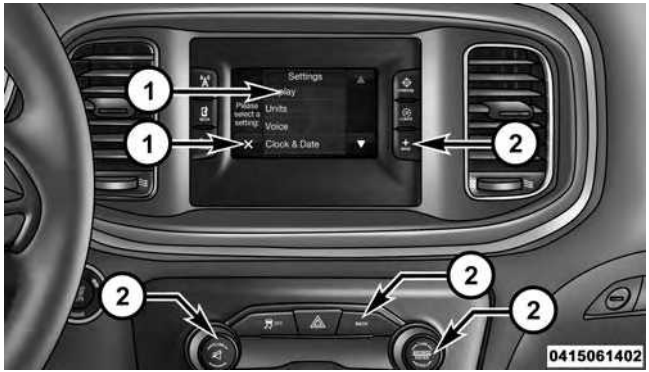

Uconnect® 5.0 Buttons On Touchscreen And Buttons On Faceplate

1 — Uconnect® Buttons On The Touchscreen
2 — Uconnect® Buttons On The Faceplate

Uconnect® 8.4A/8.4AN Buttons On Touchscreen And Buttons On Faceplate

1 — Uconnect® Buttons On The Touchscreen
2 — Uconnect® Buttons On The Faceplate

Buttons On The Faceplate

Buttons on the faceplate are located below the Uconnect® system in the center of the instrument panel. In addition, there is a Scroll/Enter control knob located on the right side. Turn the control knob to scroll through menus and change settings (i.e., 30, 60, 90), push the center of the control knob one or more times to select or change a setting (i.e., ON, OFF).

Your Uconnect® system may also have a Screen Off and Back buttons on the faceplate.

Push the Screen Off button on the faceplate to turn off the Uconnect® screen. Push the Screen Off button on the faceplate a second time to turn the screen on.

Push the Back button on the faceplate to exit out of a Menu or certain option on the Uconnect® system.

Buttons On The Touchscreen

Buttons on the touchscreen are accessible on the Uconnect® touchscreen.

Customer Programmable Features — Uconnect® 5.0 Settings

Push the + MORE button on the faceplate and then press the "Settings" button on the touchscreen to display the menu setting screen. In this mode the Uconnect® system allows you to access programmable features that may be equipped such as Display, Units, Voice, Clock, Safety/Assistance, Lights, Doors & Locks, Auto-On Comfort & Remote Start, Engine Off Options, Compass Settings, Audio, Phone/Bluetooth®, SiriusXM Setup, Restore Settings, Clear Personal Data and System Information.

NOTE: Only one touchscreen area may be selected at a time.

When making a selection, press the button on the touchscreen to enter the desired mode. Once in the desired mode, select the preferred setting. Once the setting is complete, either press the Back Arrow/Done button on the touchscreen or the Back button on the faceplate to return to the previous menu or press the "X" button on the touchscreen to close out of the settings screen. Pressing the Up or Down Arrow buttons on the right side of the screen will allow you to toggle up or down through the available settings.

Display

After pressing the "Display" button on the touchscreen the following settings will be available:

- ***Display Mode***

When in this display you may select the Auto or Manual display settings. To change Mode status, press and release the "Auto" or "Manual" button on the touchscreen. Press the back arrow/Done button on the touchscreen to return to the previous menu.

- ***Set Language***

When in this display, you may select one of multiple languages (English/Français/Español) for all display nomenclature, including the trip functions and the navigation system (if equipped). Press the "Language" button on the touchscreen and select from "English," "Français," or "Español." Press the back arrow/Done button on the touchscreen to return to the previous menu.

- ***Touchscreen Beep***

When in this display, you may turn on or shut off the sound heard when a touchscreen button is pressed. To change the Mode status, press and release the "On" or "Off" button on the touchscreen. Press the back arrow/Done button on the touchscreen to return to the previous menu.

Units

After pressing the "Units" button on the touchscreen you may select each unit of measure independently displayed in the Driver Information Display (DID), and navigation system (if equipped). The following selectable units of measure are listed below:

- ***Speed***

Select from: "MPH" or "km/h."

- ***Distance***

Select from: "mi" or "km."

- ***Fuel Consumption***

Select from: "MPG" (US), "MPG" (UK), "L/100 km" or "km/L."

- ***Pressure***

Select from: "psi," "kPa," or "bar."

- ***Temperature***

Select from: "°C," or "°F."

- ***Power***

Select from: "HP" (US), "HP" (UK), and "kW."

- ***Torque***

Select from: "lb-ft" or "Nm."

After the desired setting has been selected, press the back arrow/Done button on the touchscreen to return to the previous menu.

Voice

After pressing the "Voice" button on the touchscreen the following settings will be available:

- ***Voice Response Length***

When in this display, you may change the Voice Response Length settings. To change mode status, press and

release the "Brief" or "Long" button on the touchscreen. Press the back arrow/Done button on the touchscreen to return to the previous menu.

- *Show Command List*

When in this display, you may change the Show Command List settings. To change the mode status, press and release the "Always," "With Help," or "Never" button on the touchscreen. Press the back arrow/Done button on the touchscreen to return to the previous menu.

Clock & Date

After pressing the "Clock & Date" button on the touchscreen the following settings will be available:

- *Set Time*

When in this display, you may set the time and format manually. Press the "Set Time" button then choose from a 12 hour or 24 hour format. Press the corresponding arrow above and below the current time to adjust, then select "AM" or "PM." Press the back arrow/Done button on the touchscreen to return to the previous menu.

- *Show Time Status*

When in this display, you may turn on or shut off the digital clock in the status bar. To change the Show Time Status setting press the "Show Time Status" button on the touchscreen and select from "ON" or "OFF." Press the back arrow/Done button on the touchscreen to return to the previous menu.

- *Set Date*

When in this display, you may set the date manually. Press the "Set Date" button on the touchscreen then press the corresponding arrows above and below the current date to adjust. Press the back arrow/Done button on the touchscreen to return to the previous menu.

Safety/Assistance

After pressing the "Safety/Assistance" button on the touchscreen the following settings will be available:

- ***Forward Collision Warning — If Equipped***

The Front Collision Warning (FCW) feature provides an audible and/or visual warning to potential forward collisions. The feature can be can be set to Far, or set to Near. The default status of FCW is the Far setting. This means the system will warn you of a possible collision with the vehicle in front of you when you are farther away. This gives you the most reaction time. To change the setting for more dynamic driving, select the Near setting. This warns you of a possible collision when you are much closer to the vehicle in front of you. To change the FCW status, press and release the "Near" or "Far" button. Press the back arrow/Done button on the touchscreen to return to the previous menu.

For further information, refer to "Adaptive Cruise Control (ACC)" in "Understanding The Features Of Your Vehicle."

- ***Steering Feel Options — If Equipped***

When your vehicle is not equipped with Performance Control, the Steering Feel Options feature will allow you to adjust the steering effort and feel. Press the "Sport" button on the touchscreen to provide the greatest amount of steering feel, requiring the highest amount of steering effort. Press the "Normal" button on the touchscreen to provide greater steering feel, requiring greater steering effort. Press the "Comfort" button on the touchscreen to provide a balance of steering feel and steering effort. Press the back arrow/Done button on the touchscreen to return to the previous menu.

- ***ParkSense®***

The ParkSense® system will scan for objects behind the vehicle when the transmission shift lever/gear selector is

in REVERSE and the vehicle speed is less than 11 mph (18 km/h). It will provide an alert (audible and/or visual) to indicate the proximity to other objects. The system can be enabled with Sound Only, or Sound and Display. To change the ParkSense® status, press and release the "Sound Only" or "Sound and Display" button. Then press the back arrow/Done button on the touchscreen. Refer to "ParkSense®" in "Understanding The Features Of Your Vehicle" for system function and operating information.

- ***Rear ParkSense® Chime Volume***

The Rear ParkSense® Chime Volume settings can be selected from the DID or Uconnect® System — if equipped. The chime volume settings include LOW, MEDIUM, and HIGH. The factory default volume setting is MEDIUM. To make your selection, press the "Rear ParkSense® Volume" button on the touchscreen, then select from "Low," "Med," or "High." Press the back arrow/Done button on the touchscreen to return to the previous menu. ParkSense® will retain its last known configuration state through ignition cycles.

- ***Blind Spot Alert***

When this feature is selected, the Blind Spot Alert feature Provides alerts, visual and/or audible, to indicate objects in your blind spot. The Blind Spot Alert feature can be activated in Lights mode. When this mode is selected, the Blind Spot Monitor (BSM) system is activated and will only show a visual alert in the exterior mirrors. When Lights & Chime mode is activated, the Blind Spot Monitor (BSM) will show a visual alert in the exterior mirrors as well as an audible alert when the turn signal is on. When Off is selected, the Blind Spot Monitor (BSM) system is deactivated. To change the Blind Spot Alert status, press the "Off," "Lights," or "Lights & Chime" button on the touchscreen. Then press the back arrow/Done button on the touchscreen.

NOTE: If your vehicle has experienced any damage in the area where the sensor is located, even if the fascia is not damaged, the sensor may have become misaligned. Take your vehicle to an authorized dealer to verify sensor alignment. Having a sensor that is misaligned will result in the BSM not operating to specification.

- ***ParkView® Backup Camera Active Guidelines***

Your vehicle may be equipped with the ParkView® Rear Back Up Camera Active Guidelines that allows you to see active guidelines over the ParkView Back up camera display whenever the shift lever/gear selector is put into REVERSE. The image will be displayed on the radio touchscreen display along with a caution note to "check entire surroundings" across the top of the screen. After five seconds, this note will disappear. To enable or disable, press the "ParkView® Backup Camera Active Guidelines" button on the touchscreen, and select "On" or "Off." Press the back arrow/Done button on the touchscreen to return to the previous menu.

- ***ParkView® Backup Camera Delay***

When the vehicle is shifted out of REVERSE (with camera delay turned OFF), the rear camera mode is exited and the navigation or audio screen appears again. When the vehicle is shifted out of REVERSE (with camera delay turned ON), the rear view image with dynamic grid lines will be displayed for up to 10 seconds after shifting out of "REVERSE" unless the forward vehicle speed exceeds 8 mph (12 km/h), the transmission is shifted into PARK or the ignition is switched to the OFF position. To set the ParkView® Backup Camera Delay press the "Controls" button on the touchscreen, the "settings" button on the touchscreen, then the "Safety & Assistance" button on the touchscreen. Press the "Parkview Backup camera Delay" button on the touchscreen and select from "ON" or "OFF."

- *Rain Sensing Auto Wipers*

When this feature is selected, the system will automatically activate the windshield wipers if it senses moisture on the windshield. To enable or disable, press the "Rain Sensing" button on the touchscreen, and select "On" or "Off." Press the back arrow/Done button on the touchscreen to return to the previous menu.

- *Hill Start Assist — If Equipped*

When this feature is selected, the Hill Start Assist (HSA) system is active. Refer to "Electronic Brake Control System" in "Starting And Operating" for system function and operating information. To enable or disable, press the "Hill Start Assist" button on the touchscreen, and select "On" or "Off." Press the back arrow/Done button on the touchscreen to return to the previous menu.

Lights

After pressing the "Lights" button on the touchscreen, the following settings will be available:

- *Headlight Off Delay*

When this feature is selected, it allows the adjustment of the amount of time the headlights remain on after the engine is shut off. To change the Headlight Off Delay setting, press the "Headlight Off Delay" button on the touchscreen and choose either "0," "30," "60," or "90" buttons on the touchscreen to select your desired time interval. Press the back arrow/Done button on the touchscreen to return to the previous menu.

- *Headlight Illumination On Approach*

When this feature is selected, it allows the adjustment of the amount of time the headlights remain on when the doors are unlocked with the Remote Keyless Entry (RKE) transmitter. To change the Illuminated Approach status,

press the "Illuminated Approach" button on the touchscreen and choose either "0," "30," "60," or "90" buttons on the touchscreen to select your desired time interval. Press the back arrow/Done button on the touchscreen to return to the previous menu.

- ***Headlights With Wipers — If Equipped***

When this feature is selected, and the headlight switch is in the AUTO position, the headlights will turn on approximately 10 seconds after the wipers are turned on. The headlights will also turn off when the wipers are turned off, if they were turned on by this feature. To make your selection, press the "Lights w/Wipers" button and select from "On" or "Off." Press the back arrow/Done button on the touchscreen to return to the previous menu.

- ***Auto Dim High Beams — If Equipped***

When this feature is selected, the high beam headlights will activate/deactivate automatically under certain conditions. To make your selection, press the "Auto High Beams" button on the touchscreen, and select from "On" or "Off." Press the back arrow/Done button on the touchscreen to return to the previous menu. Refer to "Automatic High Beam — If Equipped" in "Understanding The Features Of Your Vehicle" for further information.

- ***Daytime Running Lights — If Equipped***

When this feature is selected, the headlights will turn on whenever the engine is running. To make your selection, press the "Daytime Running Lights" button on the touchscreen, and select from "On" or "Off." Press the back arrow/Done button on the touchscreen to return to the previous menu.

- ***Flash Lights With Lock***

When this feature is selected, the exterior lights will flash when the doors are locked or unlocked with the Remote Keyless Entry (RKE) transmitter. This feature may be selected with or without the sound horn on lock feature selected. To make your selection, press the "Flash Lights w/Lock" button on the touchscreen, and select from "On" or "Off." Press the back arrow/Done button on the touchscreen to return to the previous menu.

Doors & Locks

After pressing the "Doors & Locks" button on the touchscreen, the following settings will be available:

- ***Auto Unlock On Exit***

When this feature is selected, all doors will unlock when the vehicle is stopped, the transmission is in the PARK or NEUTRAL position and the driver's door is opened. To make your selection, press the "Auto Unlock On Exit" button on the touchscreen and select from "On" or "Off." Press the back arrow/Done button on the touchscreen to return to the previous menu.

- ***Sound Horn With Lock***

When this feature is selected, the horn will sound when the door locks are activated. To make your selection, press the "Horn w/Lock" Button and choose "Off," "1st Press" or "2nd Press." Press the back arrow/Done button on the touchscreen to return to the previous menu.

- ***Sound Horn With Remote Start***

When this feature is selected, the horn will sound when the remote start is activated. To make your selection, press the "Horn w/Remote Start" button on the touchscreen and select from "On" or "Off." Press the back arrow/Done button on the touchscreen to return to the previous menu.

- *Remote Door Unlock*

This feature will allow you to program your remote door locks to open "All doors" or only the "Driver door" with the first push of the Remote Keyless Entry (RKE) transmitter or grabbing the Passive Entry door handle. To make your selection, press the "Remote Door Unlock" button on the touchscreen and choose from "All" or "Driver." Press the back arrow/Done button on the touchscreen to return to the previous menu.

NOTE: If "Driver Door" is selected, the (RKE) transmitter will have to be pushed two times in order to unlock all doors.

- *Passive Entry*

This feature allows you to lock and unlock the vehicle's door(s) without having to push the Remote Keyless Entry (RKE) transmitter lock or unlock buttons. It automatically unlocks the doors when the outside door handle is grabbed. To make your selection, press the "Passive Entry" button on the touchscreen and select from "On" or "Off." Press the back arrow/Done button on the touchscreen to return to the previous menu. Refer to "Keyless Enter-N-Go™" in "Things To Know Before Starting Your Vehicle" for further information.

- *Flash Lights With Lock*

When this feature is selected, the exterior lights will flash when the doors are locked or unlocked with the Remote Keyless Entry (RKE) transmitter. This feature may be selected with or without the sound horn on lock feature selected. To make your selection, press the "Flash Lights w/Lock" button on the touchscreen, and select from "On" or "Off." Press the back arrow/Done button on the touchscreen to return to the previous menu.

Auto Comfort Systems — If Equipped

After pressing the "Auto-On Comfort & Remote Start" button on the touchscreen the following settings will be available:

- ***Auto-On Driver Heated/Ventilated Seat & Steering Wheel With Vehicle Start — If Equipped***

When this feature is selected the driver's heated seat and heated steering wheel will automatically turn ON when temperatures are below 40° F (4.4° C). When temperatures are above 80° F (26.7° C) the driver vented seat will turn ON. To make your selection, press the "Auto Heated Seats" button on the touchscreen then select either "Off," "Remote Start" or "All Starts." Press the back arrow/Done button on the touchscreen to return to the previous menu.

Engine Off Options

After pressing the "Engine Off Options" button on the touchscreen the following settings will be available.

- ***Headlight Off Delay***

When this feature is selected, the driver can choose to have the headlights remain on for 0, 30, 60, or 90 seconds when exiting the vehicle. To change the Headlight Off Delay status press the "Headlight Off Delay" button on the touchscreen and select from "0," "30," "60," or "90" buttons on the touchscreen to select your desired time interval. Press the back arrow/Done button on the touchscreen to return to the previous menu.

- ***Engine Off Power Delay***

When this feature is selected, the power window switches, radio, Uconnect® phone system (if equipped), DVD video system (if equipped), power sunroof (if equipped), and power outlets will remain active for up to

10 minutes after the ignition is cycled to OFF. Opening either front door will cancel this feature. To change the Engine Off Power Delay status press the "Engine Off Power Delay" button and select from "0 seconds," "45 seconds," "5 minutes" or "10 minutes" buttons on the touchscreen. Press the back arrow/Done button on the touchscreen to return to the previous menu.

Compass Settings — If Equipped

After pressing the "Compass Settings" button on the touchscreen the following settings will be available:

- *Variance*

Compass Variance is the difference between Magnetic North and Geographic North. To compensate for the differences the variance should be set for the zone where the vehicle is driven, per the zone map. Once properly set, the compass will automatically compensate for the differences, and provide the most accurate compass heading.

NOTE: Keep magnetic materials away from the top of the instrument panel, such as Mobile Phones, Laptops and Radar Detectors. This is where the compass module is located, and it can cause interference with the compass sensor, and it may give false readings.

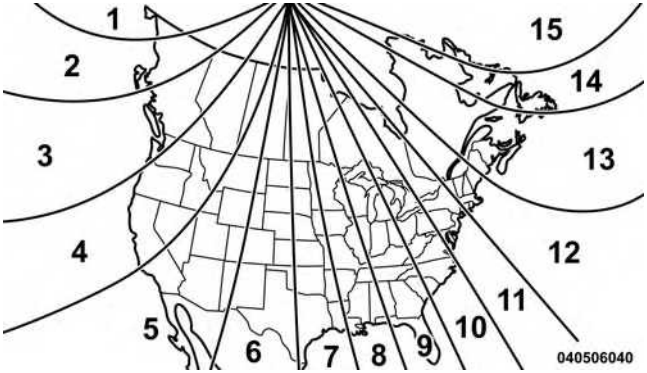

Compass Variance Map

- *Perform Compass Calibration*

Press the "Calibration" button on the touchscreen to change this setting. This compass is self-calibrating, which eliminates the need to manually reset the compass. When the vehicle is new, the compass may appear erratic until it is calibrated. You may also calibrate the compass by pressing the "ON" button on the touchscreen and completing one or more 360-degree turns (in an area free from large metal or metallic objects). The compass will now function normally.

Audio

After pressing the "Audio" button on the touchscreen the following settings will be available:

- *Balance/Fade*

This feature allows you to adjust the Balance and Fade settings. Press and drag the speaker icon or use the arrows to adjust, tap the "C" icon to readjust to the center. Press the back arrow/Done button on the touchscreen to return to the previous menu.

- *Equalizer*

When in this display you may adjust the Bass, Mid and Treble settings. Adjust the settings with the "+" and "–" buttons on the touchscreen or by selecting any point on the scale between the "+" and "–" buttons on the touchscreen. Press the back arrow/Done button on the touchscreen to return to the previous menu.

- *Speed Adjusted Volume*

This feature increases or decreases volume relative to vehicle speed. To change the Speed Adjusted Volume press the "Speed Adjusted Volume" button on the touchscreen and select from "Off," "1," "2" or "3" buttons on the touchscreen. Press the back arrow/Done button on the touchscreen to return to the previous menu.

- *Surround Sound — If Equipped*

This feature provides simulated surround sound mode. To make your selection, press the "Surround Sound" button on the touchscreen, select "On" or "Off." Press the back arrow/Done button on the touchscreen to return to the previous menu.

- *AUX Volume Offset — If Equipped*

This feature provides the ability to tune the audio level for portable devices connected through the AUX input. To make your selection, press the "AUX Volume Offset" button on the touchscreen, select "On" or "Off." Press the back arrow/Done button on the touchscreen to return to the previous menu.

- *Loudness — If Equipped*

This feature improves sound quality at lower volumes. To make your selection, press the "Loudness" button on the touchscreen, select "On" or "Off." Press the back arrow/Done button on the touchscreen to return to the previous menu.

Phone/Bluetooth®

After pressing the "Phone/Bluetooth®" button on the touchscreen the following settings will be available:

- *Paired Phones*

This feature shows which phones are paired to the Phone/Bluetooth® system. For further information, refer to the Uconnect® Supplement Manual.

- *Paired Audio Sources*

This feature shows which audio devices are paired to the Phone/Bluetooth® system. For further information, refer to the Uconnect® Supplement Manual.

SiriusXM Setup — If Equipped

After pressing the "SiriusXM Setup" button on the touchscreen, the following settings will be available:

- *Channel Skip*

SiriusXM can be programmed to designate a group of channels that are the most desirable to listen to or to exclude undesirable channels while scanning. To make your selection, press the "Channel Skip" button on the touchscreen, select the channels you would like to skip followed by pressing the back arrow/Done button on the touchscreen.

- *Subscription Information*

New vehicle purchasers or lessees will receive a free limited time subscription to SiriusXM Satellite Radio with your radio. Following the expiration of the free services, it will be necessary to access the information on the Subscription Information screen to re-subscribe.

Press the "Subscription Info" button on the touchscreen to access the Subscription Information screen.

Write down the SIRIUS ID numbers for your receiver. To reactivate your service, either call the number listed on the screen or visit the provider online.

NOTE: SiriusXM Travel Link is a separate subscription and is available for U.S. residents only.

Restore Settings

After pressing the "Restore Settings" button on the touchscreen the following settings will be available:

- *Restore Settings*

When this feature is selected it will reset the Display, Clock, Audio, and Radio Settings to their default settings. To restore the settings to their default setting, press the "Restore Settings" button and select from "Yes" or "No." If "Yes" is selected a pop-up will appear asking "Are you

sure you want to reset your settings to default?" select "Yes" to restore, or "Cancel" to exit. Press back arrow/Done button to return to the previous menu.

Clear Personal Data

After pressing the "Clear Personal Data Settings" button on the touchscreen the following settings will be available:

- *Clear Personal Data*

When this feature is selected it will remove all personal data including Bluetooth® devices and presets. To remove all personal information, press the "Clear Personal Data" button and select from "Yes" or "No." If "Yes" is selected a pop-up will appear asking "Are you sure you want to clear all personal data?" select "Yes" to Clear, or "Cancel" to exit. Press the back arrow/Done button on the touchscreen to return to the previous menu.

System Information

After pressing the "System Information" button on the touchscreen the following information will be available:

- *System Information*

When System Information is selected, a System Information screen will appear displaying the system software version.

Customer Programmable Features — Uconnect® 8.4 Settings

Press the "Apps," or the "Controls," button on the touchscreen, then press the "Settings" button on the touchscreen to display the menu setting screen. In this mode the Uconnect® system allows you to access programmable features that may be equipped such as Display, Units, Voice, Clock, Safety & Driving Assistance, Lights, Doors & Locks, Auto-On Comfort & Remote Start,

Engine Off Options, Audio, Phone/Bluetooth®, SiriusXM Setup, Restore Settings, Clear Personal Data and System Information.

NOTE:

- Only one touchscreen area may be selected at a time.
- Depending on the vehicles options, feature settings may vary.

When making a selection, press the button on the touchscreen to enter the desired mode. Once in the desired mode, press and release the preferred setting until a check-mark appears next to the setting, showing that setting has been selected. Once the setting is complete, either press the Back Arrow button on the touchscreen to return to the previous menu, or press the "X" button on the touchscreen to close out of the settings screen. Pressing the Up or Down Arrow button on the right side of the screen will allow you to toggle up or down through the available settings.

Display

After pressing the "Display" button on the touchscreen the following settings will be available:

- ***Display Mode***

When in this display you may select one of the auto display settings. To change Mode status, press and release the "Manual" or "Auto" button on the touchscreen. Then press the back arrow button on the touchscreen.

NOTE: When Day or Night is selected for the Display Mode, the usage of the Parade Mode feature will cause the radio to activate the Display Brightness Day control even though the headlights are on.

- ***Display Brightness With Headlights ON***

When in this display, you may select the brightness with the headlights on. Adjust the brightness with the "+" and "–" setting buttons on the touchscreen or by selecting any

point on the scale between the "+" and "–" buttons on the touchscreen. Then press the back arrow button on the touchscreen.

NOTE: To make changes to the "Display Brightness with Headlights ON" setting, the headlights must be on and the interior dimmer switch must not be in the "party" or "parade" positions.

- ***Display Brightness With Headlights OFF***

When in this display, you may select the brightness with the headlights off. Adjust the brightness with the "+" and "–" setting buttons on the touchscreen or by selecting any point on the scale between the "+" and "–" buttons on the touchscreen. Then press the back arrow button on the touchscreen.

NOTE: To make changes to the "Display Brightness with Headlights OFF" setting, the headlights must be off and the interior dimmer switch must not be in the "party" or "parade" positions.

- ***Set Theme — If Equipped***

This feature will allow you to choose a theme for the display screen. The theme will change the background color, highlight color, and button color of the display screen.

- ***Set Language***

When in this display, you may select one of multiple languages (English / Français / Español) for all display nomenclature, including the trip functions and the navigation system (if equipped). Press the Set Language button on the touchscreen, then press the desired language button on the touchscreen until a check-mark appears next to the language, showing that setting has been selected. Press the back arrow button on the touchscreen to return to the previous menu.

- *Touchscreen Beep*

When in this display, you may turn on or shut off the sound heard when a touchscreen button (button on the touchscreen) is pressed. Press the "Touchscreen Beep" button on the touchscreen until a check-mark appears next to the setting, showing that setting has been selected. Press the back arrow button on the touchscreen to return to the previous menu.

- *Control Screen Time-Out — If Equipped*

When this feature is selected, the Controls Screen will stay open for five seconds before the screen times out. With the feature deselected, the screen will stay open until it is manually closed. Press the Control Screen Time-Out button on the touchscreen until a check-mark appears next to the setting, showing that setting has been selected. Press the back arrow button on the touchscreen to return to the previous menu.

- *Navigation Turn-By-Turn In Cluster — If Equipped*

When this feature is selected, the turn-by-turn directions will appear in the display as the vehicle approaches a designated turn within a programmed route. To make your selection, press the "Navigation Turn-By-Turn In Cluster" button on the touchscreen, until a check-mark appears next to the setting, showing that setting has been selected. Press the back arrow button on the touchscreen to return to the previous menu.

Units

After pressing the "Units" button on the touchscreen you may select each unit of measure independently displayed in the Driver Information Display (DID), and navigation system (if equipped). The following selectable units of measure are listed below:

- *Speed*

Select from: "MPH" or "km/h."

- *Distance*

Select from: “mi” or “km.”

- *Fuel Consumption*

Select from: “MPG” (US), “MPG” (UK), “L/100 km” or “km/L.”

- *Pressure*

Select from: “psi,” “kPa,” or “bar.”

- *Temperature*

Select from: “°C,” or “°F.”

- *Power*

Select from: “HP” (US), “HP” (UK), and “kW.”

- *Torque*

Select from: “lb-ft” or “Nm.”

After the desired setting has been selected, press the back arrow/Done button on the touchscreen to return to the previous menu.

Voice

After pressing the “Voice” button on the touchscreen the following settings will be available:

- *Voice Response Length*

When in this display, you may change the Voice Response Length settings. To change the Voice Response Length, press the “Brief” or “Detailed” button on the touchscreen until a check-mark appears next to the setting, showing that setting has been selected. Press the back arrow button on the touchscreen to return to the previous menu.

- *Show Command List*

When in this display, you may change the Show Command List settings. To change the Show Command List

settings, press the “Always,” “With Help” or “Never” button on the touchscreen until a check-mark appears next to the setting, showing that setting has been selected. Press the back arrow button on the touchscreen to return to the previous menu.

Clock

After pressing the “Clock” button on the touchscreen the following settings will be available:

- ***Sync Time With GPS***

This feature will allow you to automatically have the radio set the time. To change the Sync Time setting, press the “Sync time with GPS” button on the touchscreen until a check-mark appears next to the setting, showing that setting has been selected. Press the back arrow button on the touchscreen to return to the previous menu.

- ***Set Time Hours***

This feature will allow you to adjust the hours. The “Sync time with GPS” button on the touchscreen must be unchecked. To make your selection, press the “+” or “–” buttons on the touchscreen to adjust the hours up or down. Press the back arrow button on the touchscreen to return to the previous menu.

- ***Set Time Minutes***

This feature will allow you to adjust the minutes. The “Sync time with GPS” button on the touchscreen must be unchecked. To make your selection, press the “+” or “–” buttons on the touchscreen to adjust the minutes up or down. Press the back arrow button on the touchscreen to return to the previous menu.

- *Time Format*

This feature will allow you to select the time format display setting. Press the "Time Format" button on the touchscreen until a check-mark appears next to the 12hrs or 24hrs setting, showing that setting has been selected. Press the back arrow button on the touchscreen to return to the previous menu.

- *Show Time In Status Bar — If Equipped*

This feature will allow you to turn on or shut off the digital clock in the status bar. To change the Show Time Status setting press the "Show Time in Status Bar" button on the touchscreen until a check-mark appears next to setting, indicating that the setting has been selected. Press the back arrow button on the touchscreen to return to the previous menu or press the "X" button on the touchscreen to close out of the settings screen.

Safety & Driving Assistance

After pressing the "Safety & Driving Assistance" button on the touchscreen the following settings will be available:

- *Forward Collision Warning — If Equipped*

The Front Collision Warning (FCW) feature provides an audible and/or visual warning to potential forward collisions. The feature can be can be set to Far, or set to Near. The default status of FCW is the Far setting. This means the system will warn you of a possible collision with the vehicle in front of you when you are farther away. This gives you the most reaction time. To change the setting for more dynamic driving, select the Near setting. This warns you of a possible collision when you are much closer to the vehicle in front of you. To change the FCW status, press and release the "Near" or "Far" button. Then press the back arrow button on the touchscreen.

For further information, refer to “Adaptive Cruise Control (ACC)” in “Understanding The Features Of Your Vehicle”.

- ***Forward Collision Warning (FCW) — Active Braking***

The FCW system includes Advanced Brake Assist (ABA). When this feature is selected, the ABA applies additional brake pressure when the driver requests insufficient brake pressure to avoid a potential frontal collision. The ABA system becomes active at 5 mph (8 km/h). To make your selection, press the “Forward Collision Warning Active Braking” button on the touchscreen, until a checkmark appears next to setting, indicating that the setting had been selected. Press the back arrow button on the touchscreen to return to the previous menu. For further information, refer to “Forward Collision Warning (FCW) With Mitigation” in “Understanding The Features Of Your Vehicle.”

- ***LaneSense Warning — If Equipped***

When this feature is selected, it sets the distance at which the steering wheel will provide feedback for potential lane departures. The LDW sensitivity can be set to provide either an “Early,” “Medium,” or “Late” warning zone start point.

For further information, refer to “LaneSense Warning (LDW)” in “Understanding The Features Of Your Vehicle”.

- ***LaneSense Strength — If Equipped***

When this feature is selected, it sets the strength of the steering wheel feedback for potential lane departures. The amount of directional torque the steering system can apply to the steering wheel to correct for vehicle lane departure can be set at “Low,” “Medium” or “High.”

For further information, refer to “Lane Departure Warning (LDW)” in “Understanding The Features Of Your Vehicle”.

- ***Power Steering — If Equipped***

When your vehicle is not equipped with Performance Control, the Steering Feel Options feature will allow you to adjust the steering effort and feel. Press the "Sport" button on the touchscreen to provide the greatest amount of steering feel, requiring the highest amount of steering effort. Press the "Normal" button on the touchscreen to provide greater steering feel, requiring greater steering effort. Press the "Comfort" button on the touchscreen to provide a balance of steering feel and steering effort. Press the back arrow button on the touchscreen to return to the previous menu.

- ***ParkSense®***

The ParkSense® system will scan for objects behind the vehicle when the transmission shift lever is in REVERSE and the vehicle speed is less than 11 mph (18 km/h). It will provide an alert (audible and/or visual) to indicate the proximity to other objects. The system can be enabled with Sound Only, or Sound and Display. To change the ParkSense® status, press and release the "Sound Only" or "Sound and Display" button. Then press the back arrow button on the touchscreen. Refer to "ParkSense®" in "Understanding The Features Of Your Vehicle" for system function and operating information.

- ***Front ParkSense® Volume***

The Front ParkSense® Chime Volume settings can be selected from the DID or Uconnect® System. The chime volume settings include LOW, MEDIUM, and HIGH. The factory default volume setting is MEDIUM. To make your selection, press the "Front ParkSense® Vol." button on the touchscreen, until a check-mark appears next to setting, indicating that the setting had been selected. Press the back arrow button on the touchscreen to return to the previous menu. ParkSense® will retain its last known configuration state through ignition cycles.

- *Rear ParkSense® Volume*

The Rear ParkSense® Chime Volume settings can be selected from the DID or Uconnect® System. The chime volume settings include LOW, MEDIUM, and HIGH. The factory default volume setting is MEDIUM. To make your selection, press the "Rear ParkSense® Vol." button on the touchscreen, until a check-mark appears next to setting, indicating that the setting had been selected. Press the back arrow button on the touchscreen to return to the previous menu. ParkSense® will retain its last known configuration state through ignition cycles.

- *Tilt Side Mirrors In Reverse*

When this feature is selected, the exterior sideview mirrors will tilt downward when the ignition is in the RUN position and the transmission shift lever is in the REVERSE position. The mirrors will move back to their previous position when the transmission is shifted out of REVERSE. To make your selection, press the "Tilt Side Mirrors in Reverse" button on the touchscreen, until a check-mark appears next to setting, indicating that the setting had been selected. Press the back arrow button on the touchscreen to return to the previous menu.

- *Blind Spot Alert*

When this feature is selected, the Blind Spot Alert feature Provides alerts, visual and/or audible, to indicate objects in your blind spot. The Blind Spot Alert feature can be activated in "Lights" mode. When this mode is selected, the Blind Spot Monitor (BSM) system is activated and will only show a visual alert in the exterior mirrors. When "Lights & Chime" mode is activated, the Blind Spot Monitor (BSM) will show a visual alert in the exterior mirrors as well as an audible alert when the turn signal is on. When "Off" is selected, the Blind Spot Monitor (BSM) system is deactivated. To change the Blind Spot Alert status, press the "Off," "Lights" or "Lights & Chime" button on the touchscreen. Then press the back arrow button on the touchscreen.

NOTE: If your vehicle has experienced any damage in the area where the sensor is located, even if the fascia is not damaged, the sensor may have become misaligned. Take your vehicle to an authorized dealer to verify sensor alignment. Having a sensor that is misaligned will result in the BSM not operating to specification.

- ***ParkView® Backup Camera Active Guidelines***

Your vehicle may be equipped with the ParkView® Rear Back Up Camera Active Guidelines that allows you to see active guidelines over the ParkView Back up camera display whenever the shift lever is put into REVERSE. The image will be displayed on the radio touchscreen display along with a caution note to "check entire surroundings" across the top of the screen. After five seconds, this note will disappear. To make your selection, press the "ParkView Backup Camera Active Guidelines" button on the touchscreen, until a check-mark appears next to setting, indicating that the setting had been selected. Press the back arrow button on the touchscreen to return to the previous menu.

- ***ParkView® Backup Camera Delay***

When the vehicle is shifted out of REVERSE (with camera delay turned OFF), the rear camera mode is exited and the navigation or audio screen appears again. When the vehicle is shifted out of REVERSE (with camera delay turned ON), the rear view image with dynamic grid lines will be displayed for up to 10 seconds after shifting out of "REVERSE" unless the forward vehicle speed exceeds 8 mph (12 km/h), the transmission is shifted into "PARK" or the ignition is switched to the OFF position. To set the ParkView® Backup Camera Delay press the "Controls" button on the touchscreen, the "settings" button on the touchscreen, then the "Safety & Driving Assistance" button on the touchscreen. Press the "Parkview Backup Camera Delay" button on the touchscreen to turn the ParkView® Delay ON or OFF.

- *Rain Sensing Auto Wipers*

When this feature is selected, the system will automatically activate the windshield wipers if it senses moisture on the windshield. To make your selection, press the "Rain Sensing Auto Wipers" button on the touchscreen, until a check-mark appears next to setting, indicating that the setting had been selected. Press the back arrow button on the touchscreen to return to the previous menu.

- *Hill Start Assist — If Equipped*

When this feature is selected, the Hill Start Assist (HSA) system is active. Refer to "Electronic Brake Control System" in "Starting And Operating" for system function and operating information. To make your selection, press the "Hill Start Assist" button on the touchscreen, until a check-mark appears next to setting, indicating that the setting had been selected. Press the back arrow button on the touchscreen to return to the previous menu.

Lights

After pressing the "Lights" button on the touchscreen the following settings will be available.

- *Headlight Off Delay*

When this feature is selected, it allows adjustment of the amount of time the headlights remain on after the engine is shut off. To change the Headlights Off Delay setting, press the "+" or "-" button on the touchscreen to select your desired time interval, and choose either 0 sec, 30 sec, 60 sec or 90 seconds. Press the back arrow button on the touchscreen to return to the previous menu, or push the back button on the faceplate.

- *Headlight Illumination On Approach*

When this feature is selected, the headlights will activate and remain on for 0, 30, 60, or 90 seconds when the doors are unlocked with the Remote Keyless Entry (RKE) transmitter. To change the Illuminated Approach status,

press the "+" or "-" button on the touchscreen to select your desired time interval. Press the back arrow button on the touchscreen to return to the previous menu, or push the back button on the faceplate.

- ***Headlights With Wipers — If Equipped***

When this feature is selected, and the headlight switch is in the AUTO position, the headlights will turn on approximately 10 seconds after the wipers are turned on. The headlights will also turn off when the wipers are turned off if they were turned on by this feature. To make your selection, press the "Headlights With Wipers" button on the touchscreen, until a check-mark appears next to setting, indicating that the setting has been selected. Press the back arrow button on the touchscreen to return to the previous menu, or push the back button on the faceplate.

- ***Auto Dim High Beams — If Equipped***

When this feature is selected, the high beam headlights will activate/deactivate automatically under certain conditions. To make your selection, press the "Auto High Beams" button on the touchscreen, until a check-mark appears next to setting, indicating that the setting has been selected. Press the back arrow button on the touchscreen to return to the previous menu, or push the back button on the faceplate. Refer to "Lights — If Equipped" in "Understanding The Features Of Your Vehicle" for further information.

- ***Daytime Running Lights — If Equipped***

When this feature is selected, the headlights will turn on whenever the engine is running. To make your selection, press the "Daytime Running Lights" button on the touchscreen, until a check-mark appears next to setting, indicating that the setting has been selected. Press the back

arrow button on the touchscreen to return to the previous menu, or push the back button on the faceplate.

- ***Flash Lights With Lock***

When this feature is selected, the hazard lights will flash when the doors are locked or unlocked with the Remote Keyless Entry (RKE) transmitter, or when using the passive entry feature. This feature may be selected with or without the sound horn on lock feature selected. To make your selection, press the "Flash Lights with Lock" button on the touchscreen, until a check-mark appears next to setting, indicating that the setting has been selected. Press the back arrow button on the touchscreen to return to the previous menu, or push the back button on the faceplate.

Doors & Locks

After pressing the "Doors & Locks" button on the touchscreen the following settings will be available:

- ***Auto Unlock On Exit***

When this feature is selected, all doors will unlock when the vehicle is stopped, the transmission is in the PARK or NEUTRAL position and the driver's door is opened. To make your selection, press the "Auto Unlock On Exit" button on the touchscreen, until a check-mark appears next to the setting, showing that the setting has been selected. Press the back arrow button on the touchscreen to return to the previous menu.

- ***Flash Lights With Lock***

When this feature is selected, the exterior lights will flash when the doors are locked or unlocked with the Remote Keyless Entry (RKE) transmitter, or when using the passive entry feature. This feature may be selected with

or without the sound horn on lock feature selected. To make your selection, press the "Flash Lights with Lock" button on the touchscreen, until a check-mark appears next to setting, indicating that the setting has been selected. Press the back arrow button on the touchscreen to return to the previous menu.

- ***Sound Horn With Lock***

When this feature is selected, the horn will sound when the door locks are activated. To make your selection, press either the "Off," "1st Press," or "2nd Press" button on the touchscreen, until a check-mark appears next to setting, showing that setting has been selected. Press the back arrow button on the touchscreen to return to the previous menu.

- ***Sound Horn With Remote Start***

When this feature is selected, the horn will sound when the remote start is activated. To make your selection, press the "Sound Horn with Remote Start" button on the touchscreen until a check-mark appears next to setting, showing that setting has been selected. Press the back arrow button on the touchscreen to return to the previous menu.

- ***1st Press Of Key Fob Unlocks***

When "Driver Door" is selected with 1st Press Of Key Fob Unlocks, only the driver's door will unlock with the first press of the Remote Keyless Entry (RKE) transmitter UNLOCK button. You must press the RKE transmitter UNLOCK button twice to unlock the passenger's doors. When "All Doors" is selected for 1st Press Of Key Fob Unlocks, all doors will unlock on the first press of the RKE transmitter UNLOCK button.

NOTE: If the vehicle is programmed 1st Press Of Key Fob Unlocks "All Doors," all doors will unlock no matter which Passive Entry equipped door handle is grasped. If 1st Press Of Key Fob Unlocks "Driver Door" is programmed, only the driver's door will unlock when the driver's door is grasped. With Passive Entry, if 1st Press Of Key Fob Unlocks "Driver Door" is programmed, touching the handle more than once will only result in the driver's door opening. If "Driver Door" is selected, once the driver door is opened, the interior door lock/unlock switch can be used to unlock all doors (or use RKE transmitter).

- ***Passive Entry***

This feature allows you to lock and unlock the vehicles door(s) without having to push the Remote Keyless Entry (RKE) transmitter LOCK or UNLOCK buttons. To make your selection, press the "Passive Entry" button on the touchscreen, until a check-mark appears next to the setting, showing that the setting has been selected. Press the back arrow button on the touchscreen to return to the previous menu. Refer to "Keyless Enter-N-Go™" in "Things To Know Before Starting Your Vehicle".

- ***Personal Settings Linked to Key Fob On/Off — If Equipped***

This feature provides automatic recall of all settings stored to a memory location (driver's seat, exterior mirrors, steering column position and radio station presets) to enhance driver mobility when entering and exiting the vehicle. To make your selection, press the "Personal Settings Linked to Key Fob" button on the touchscreen, until a check-mark appears next to setting, showing that setting has been selected. Press the back arrow button on the touchscreen to return to the previous menu, or push the back button on the faceplate.

NOTE: The seat will return to the memorized seat location (if Recall Memory with Remote Key Unlock is set to ON) when the Remote Keyless Entry (RKE) transmitter is used to unlock the door. Refer to "Driver Memory Seat" in "Understanding The Features Of Your Vehicle" for further information.

Auto Comfort Systems — If Equipped

After pressing the "Auto-On Comfort" button on the touchscreen the following settings will be available:

- ***Auto-On Driver Heated/Ventilated Seat & Steering Wheel With Vehicle Start — If Equipped***

When this feature is selected the driver's heated seat and heated steering wheel will automatically turn ON when temperatures are below 40° F (4.4° C). When temperatures are above 80° F (26.7° C) the driver vented seat will turn ON. To make your selection, press the "Auto-On Driver Heated/Ventilated Seat & Steering Wheel With Vehicle Start" button to select from "Off," "Remote Start" or "All Starts" until a check-mark appears next to setting, showing that setting has been selected. Press the back arrow button on the touchscreen to return to the previous menu.

Engine Off Options

After pressing the "Engine Off Options" button on the touchscreen the following settings will be available:

- ***Easy Exit Seat — If Equipped***

When this feature is selected, the Driver's seat will automatically move rearward once the engine is shut off. To make your selection, press the "Easy Exit Seat" button on the touchscreen, until a check-mark appears next to setting, showing that setting has been selected. Press the back arrow button on the touchscreen to return to the previous menu.

- *Engine Off Power Delay*

When this feature is selected, the power window switches, radio, Uconnect® Phone system (if equipped), DVD video system (if equipped), power sunroof (if equipped), and power outlets will remain active for up to 10 minutes after the ignition is cycled to OFF. Opening either front door will cancel this feature. To change the Engine Off Power Delay setting, press the "+" or "-" button on the touchscreen to select your desired time interval, and choose from "0 seconds," "45 seconds," "5 minutes" or "10 minutes." Press the back arrow button on the touchscreen to return to the previous menu.

- *Headlight Off Delay*

When this feature is selected, the driver can choose to have the headlights remain on for 0, 30, 60, or 90 seconds when exiting the vehicle. To change the Headlight Off Delay status press the "+" or "–" button on the touchscreen to select your desired time interval. Press the back arrow button on the touchscreen to return to the previous menu.

Audio

After pressing the "Audio" button on the touchscreen the following settings will be available.

- *Balance/Fade*

This feature allows you to adjust the Balance and Fade settings. Press and drag the speaker icon, use the arrows to adjust, or tap the 'C' icon to readjust to the center. Press the back arrow button on the touchscreen to return to the previous menu.

- *Equalizer*

This feature allows you to adjust the Bass, Mid and Treble settings. Adjust the settings with the "+" and "–" setting buttons on the touchscreen or by selecting any point on

the scale between the "+" and "–" buttons on the touchscreen. Press the back arrow button on the touchscreen to return to the previous menu.

NOTE: Bass/Mid/Treble allow you to simply slide your finger up or down to change the setting as well as press directly on the desired setting.

- ***Speed Adjusted Volume***

This feature increases or decreases volume relative to vehicle speed. To change the Speed Adjusted Volume press the "Off," "1," "2" or "3" button on the touchscreen. Press the back arrow button on the touchscreen to return to the previous menu.

- ***Surround Sound — If Equipped***

This feature provides simulated surround sound mode. To make your selection, press the "Surround Sound" button on the touchscreen, select "On" or "Off." Press the back arrow button on the touchscreen to return to the previous menu.

- ***AUX Volume Offset — If Equipped***

This feature provides the ability to tune the audio level for portable devices connected through the AUX input. To make your selection, press the AUX Volume Match button on the touchscreen, choose a level from –3 to +3. Press the back arrow button on the touchscreen to return to the previous menu.

- ***Loudness — If Equipped***

Loudness improves sound quality at lower volumes. To make your selection, press the "Loudness" button on the touchscreen, then choose "Yes" or "No." Press the back arrow button on the touchscreen to return to the previous menu.

Phone/Bluetooth®

After pressing the "Phone/Bluetooth®" button on the touchscreen the following settings will be available:

- *Paired Phones*

This feature shows which phones are paired to the Phone/Bluetooth® system. For further information, refer to the Uconnect® Supplement Manual.

- *Paired Audio Sources*

This feature shows which audio devices are paired to the Phone/Bluetooth® system. For further information, refer to the Uconnect® Supplement Manual.

SiriusXM Setup — If Equipped

After pressing the "SiriusXM Setup" button on the touchscreen, the following settings will be available:

- *Channel Skip*

SiriusXM can be programmed to designate a group of channels that are the most desirable to listen to or to exclude undesirable channels while scanning. To make your selection, press the "Channel Skip" button on the touchscreen, select the channels you would like to skip followed by pressing the back arrow button on the touchscreen.

- *Subscription Information*

New vehicle purchasers or lessees will receive a free limited time subscription to SiriusXM Satellite Radio with your radio. Following the expiration of the free services, it will be necessary to access the information on the Subscription Information screen to re-subscribe.

Press the "Subscription Info" button on the touchscreen to access the Subscription Information screen.

Write down the SIRIUS ID numbers for your receiver. To reactivate your service, either call the number listed on the screen or visit the provider online.

NOTE: SiriusXM Travel Link is a separate subscription and is available for U.S. residents only.

Restore Settings

After pressing the "Restore Settings" button on the touchscreen the following settings will be available:

- ***Restore Settings***

When this feature is selected it will reset the Display, Clock, Audio, and Radio Settings to their default settings. To restore the settings to their default setting, press the Restore Settings button. A pop-up will appear asking "Are you sure you want to reset your settings to default?" select "Yes" to restore, or "Cancel" to exit. Once the settings are restored, a pop up appears stating "settings reset to default." Press the okay button on the touchscreen to exit.

Clear Personal Data

After pressing the "Clear Personal Data Settings" button on the touchscreen the following settings will be available:

- ***Clear Personal Data***

When this feature is selected it will remove personal data including Bluetooth® devices and presets. To remove personal information, press the "Clear Personal Data" button and a pop-up will appear asking "Are you sure you want to clear all personal data?" select "OK" to Clear, or "Cancel" to exit. Once the data has been cleared, a pop up appears stating "Personal data cleared". Press the back arrow button on the touchscreen to return to the previous menu.

System Information

After pressing the "System Information" button on the touchscreen the following information will be available:

- *System Information*

When System Information is selected, a System Information screen will appear displaying the system software version.

Performance Pages — If Equipped

Performance Pages is an application that provides a display for performance indicators, as received from the Instrument Cluster, that will help you gain familiarity with the capabilities of your vehicle in real-time.

To access the Performance Pages, press the "Apps" button on the touchscreen then press the "Performance Pages" button on the touchscreen. Press the desired button on the touchscreen to access that specific Performance Page.

WARNING!

Measurement of vehicle statistics with the Performance Pages is intended for off-highway or off-road use only and should not be done on any public roadways. It is recommended that these features be used in a controlled environment and within the limits of the law. The capabilities of the vehicle as measured by the Performance Pages must never be exploited in a reckless or dangerous manner, which can jeopardize the user's safety or the safety of others. Only a safe, attentive, and skillful driver can prevent accidents.

The Performance Pages include the following:

- Home
- Timers
- Gauges 1
- Gauges 2
- G-Force
- Engine

The following describes each feature and its operation:

Home

Performance Pages — Home

When Home is selected, the following options will be available:

- A series of six images which can be selected by the user.

- A left and right arrow to allow the user to scroll through vehicle images.
- A short-cut to the Performance Control feature.

Timers

Performance Pages — Timers

When the Timers Page is selected you will be able to select from following "Tickets":

- *Current*

Pressing the "Current" button displays a "real time" summary of performance timers.

- *Last*

Pressing the "Last" button displays the last recorded run of performance timers.

- *Best*

Pressing the "Best" button displays the best recorded run of performance timers, except for braking data.

- *Save*

Pressing the "Save" button will let you save the last run. Any saved run over 10, will overwrite the last saved run for Uconnect® System storage. The operation of the Save feature is listed below:

Performance Pages — Save

- With a USB jump drive installed, press the "USB" button to save to the jump drive.
- With an SD Card installed, press the "SD Card" to save runs to the SD Card.
- Press the "Uconnect" button to save the runs to the Owner web page.
- Press the "Cancel" button to view the last timer "Ticket."

The "Tickets" contain the timers listed below:

- *Reaction Time*

Measures the driver's reaction time for launching the vehicle against a simulated a drag strip timing light (behavior modeled after 500 Sportsman Tree) displayed in the Driver Information Display (DID).

NOTE: The Reaction Time, MPH, ⅛ and ¼ Mile timers will be "ready" when the vehicle is at 0 MPH (0 km/h)

- ***0-60 MPH (0-100 km/h)***

Displays the time it takes for the vehicle to go from 0 to 60 mph (0 to 100 km/h).

- ***0-100 MPH (0-160 km/h)***

Displays the time it takes for the vehicle to go from 0 to 100 mph (0 to 160 km/h).

- ***⅛ Mile (200 meter)***

Displays the time it takes for the vehicle to go an ⅛ mile (200 meters).

- ***¼ Mile (400 meter)***

Displays the time it takes for the vehicle to go an ¼ mile (400 meters).

- ***Brake Distance***

Displays the distance it takes the vehicle to make a full stop.

NOTE: The distance measurement will be aborted if the brake pedal is released or the parking brake is engaged, before the vehicle comes to a complete stop.

- ***Brake Speed***

Displays the speed the vehicle is traveling when the brake pedal is depressed.

NOTE: Brake Distance and Speed timers will only display "ready" when vehicle is traveling at greater than 30 MPH (48 km/h).

Gauges 1

Performance Pages — Gauges 1

When selected, this screen displays the following values:

- *Coolant Temperature*

Shows the actual coolant temperature.

- *Oil Pressure*

Shows the actual oil pressure.

- *Oil Temperature*

Shows the actual oil temperature.

Gauges 2

Performance Pages — Gauges 2 (Automatic Transmission)

When selected, this screen displays the following values:

- ***Battery Voltage***

Shows the actual battery voltage.

- ***Intake Air Temperature***

Shows the actual intake air temperature.

- ***Transmission Temperature (Automatic Transmission Only)***

Shows the actual transmission temperature.

G-Force

Charger Performance Pages — G-Force

When selected, this screen displays all four G-Force values (two lateral and two longitudinal) as well as steering angle.

When G-Force is selected, the following features will be available:

- ***Lateral G-Force Left and Right***

The lateral g-force measures the (sideways) left and right force of the vehicle.

- ***Longitudinal G-Force Acceleration and Braking***

The longitudinal g-force measures the acceleration and braking force of the vehicle.

- ***Peak G-Forces Acceleration and Braking, Left and Right***

This shows the maximum g-forces that have been achieved since the last reset from the DID. Peak values are maintained through ignition cycles by the DID until they are cleared by the driver.

- *Vehicle Speed*

Vehicle Speed measures the current speed of the vehicle in either mph or km/h, starting at 0 with no maximum value.

- *Steering Wheel Angle*

Steering Wheel Angle utilizes the steering angle sensor to measure the degree of the steering wheel relative to zero. The zero degree measurement indicates a steering wheel straight ahead position. When the steering angle value is negative, this indicates a turn to the left, and when the steering angle value is positive, a turn to the right.

Engine

Performance Pages — Engine

When selected, this screen displays the following values:

- *Vehicle Speed*

Shows the actual vehicle speed.

- *Instantaneous Horsepower/Kilowatts*

Shows the instantaneous horsepower.

- *Instantaneous Torque*

Shows the instantaneous torque.

- *Oil Pressure*

Shows the actual engine oil pressure.

- *Gear (Automatic Transmission Only)*

Shows the current (or pending) operating gear of the vehicle.

Performance Control — If Equipped

Your vehicle is equipped with a Performance Control feature which allows for coordinating the operation of various vehicle systems depending upon the type of driving behavior desired. The Performance Control feature is controlled through the Uconnect® radio and may be accessed by performing any of the following:

- Pushing the Super Track Pack button on the instrument panel switch bank.
- Selecting "Performance Control" from the "Apps" menu.
- Selecting "Performance Control" from within the Performance Pages menu.

You will be able to enable, disable, and customize the functionality of the Launch Control and Drive Mode Set-Up features within Performance Control.

Descriptions of these features are provided below. To access information about the functionality of these features through the Uconnect® system, press the "Info" button on the touchscreen.

Launch Mode

WARNING!

Launch Mode is intended for off-highway or off-road use only and should not be used on any public roadways. It is recommended that this feature be used in a controlled environment, and within the limits of the law. The capabilities of the vehicle as measured by the performance pages must never be exploited in a reckless or dangerous manner, which can jeopardize the user's safety or the safety of others. Only a safe, attentive, and skillful driver can prevent accidents.

Launch Control

This vehicle is equipped with a Launch Control system that is designed to allow the driver to achieve maximum vehicle acceleration in a straight line. Launch Control is a form of traction control that manages tire slip while launching the vehicle. This feature is intended for use during race events on a closed course where consistent quarter mile and zero to sixty times are desired. The

system is not intended to compensate for lack of driver experience or familiarity with the race track. Use of this feature in low traction (cold, wet, gravel, etc.) conditions may results in excess wheel slip outside this systems control resulting in an aborted launch.

NOTE:

- Launch control should not be used on public roads. Always check track conditions and the surrounding area.
- Launch Control is not available for the first 500 miles of the vehicle's life.
- Launch Control should only be used when the engine and transmission are at operating temperature.
- Launch Control is intended to be used on dry, paved road surfaces only. Use on slippery or loose surfaces may cause damage to vehicle components and is not recommended.

Drive Mode Set-Up

Drive Mode Set-Up

Pressing the "Drive Mode Set-Up" button on the touch-screen within the Performance Control screen indicates the real-time status of the various systems. Pressing the "Sport Mode Set-Up" or "Default Mode Set-Up" buttons

on the touchscreen, the driver can configure their individual drive modes and see how those configurations affect the performance of the vehicle.

NOTE: Not all of the options listed in this manual are available on every vehicle, below is a chart with all available Drive Mode vehicle configurations.

Available Mode Configurations

Transmission	Auto
Engine	N/A
Engine/Trans	X
Steering	X
Paddle Shifters	X
Traction Control	X

Refer to the Sport and Default modes for their detailed operation.

NOTE: These settings will remain in effect when using the Launch Control feature.

Default Mode

Default Mode

The vehicle will always start in Default Mode. This mode is for typical driving conditions. While in Default Mode,

the Engine, Transmission and Traction will operate in their Normal settings and cannot be changed. The Steering assist may be configured to Normal, Sport, or Comfort by pressing the corresponding buttons on the touchscreen. The Paddle Shifters may be enabled or disabled while in this mode.

Default Mode Set-Up

Sport Mode

Sport Mode

Sport Mode is a configuration set-up for typical enthusiast driving. The Transmission and Steering are both set to their Sport settings. The steering wheel paddle switches are enabled. The Traction Control defaults to Normal.

Any of these four settings may be changed to the driver's preferences by pressing the buttons on the touchscreen. Push the Sport button on the instrument panel switch bank to put the vehicle in Sport Mode and activate these settings. The customized settings will only be active when the Sport button is active.

Sport Mode Set-Up

Possible Drive Mode configurations are listed below with accompanying descriptions. The information contained in the list below can also be accessed from within the mode Set-Up menus. To access the information, press the "Info" button on the touchscreen from the mode Set-Up menu, and use the left/right arrows to toggle through available descriptions. The title for each system in the Set-Up menu can be pressed, which provides the descriptions for each function of that system.

Engine/Trans

Engine/Trans

- *Sport*

Press the "Sport" button on the touchscreen for improved throttle response and modified shifting for an enhanced driving experience.

- *Normal*

Press the "Norm" button on the touchscreen for a balance of throttle response, shift comfort and economy for normal driving.

Paddle Shifters

Paddle Shifters

- *ON*

Press the "ON" button on the touchscreen to enable steering wheel Paddle Shifters.

- *OFF*

Press the "OFF" button on the touchscreen to disable steering wheel Paddle Shifters.

Traction

Traction Control

- *SPORT*

Press the "SPORT" button on the touchscreen to turn off traction control and reduce stability control.

- *NORMAL*

Press the "NORM" button on the touchscreen to provide full traction control and full stability control.

Steering

Steering

- *Sport*

Press the "Sport" button on the touchscreen to provide the greatest amount of steering feel, requiring the highest amount of steering effort.

- *Normal*

Press the "Norm" button on the touchscreen to provide greater steering feel, requiring greater steering effort.

- *Comfort*

Press the "Comf" button on the touchscreen to provide a balance of steering feel and steering effort.

Uconnect® RADIOS — IF EQUIPPED

For detailed information about your Uconnect® radio, refer to your Uconnect® Supplement Manual.

iPod®/USB/MP3 CONTROL

This feature allows an iPod® or an external USB device to be plugged into the USB port.

iPod® control supports Mini, 4G, Photo, Nano, 5G iPod® and iPhone® devices. Some iPod® software versions may not fully support the iPod® control features. Please visit Apple's website for software updates.

The Media hub also allows the use of an SD card. For further information, refer to the Uconnect® Supplement Manual.

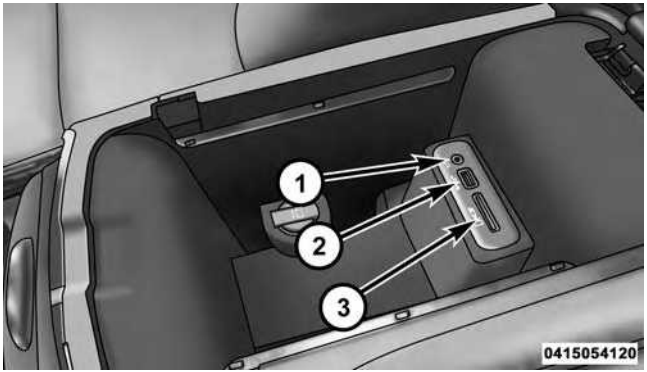

AUX/USB/SD Card Ports

1 — Aux Jack
2 — USB Port
3 — SD Card Slot

Located on the rear of the front center console are dual USB "Charge Only" ports.

Rear USB Charging Ports

The USB "Charge Only" ports will recharge battery operated USB devices when connected.

STEERING WHEEL AUDIO CONTROLS — IF EQUIPPED

The remote sound system controls are located on the rear surface of the steering wheel. Reach behind the wheel to access the switches.

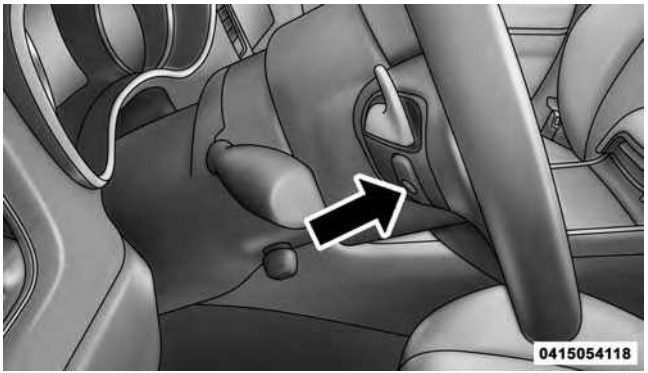

Remote Sound Controls (Back View Of Steering Wheel)

The right-hand control is a rocker-type switch with a push-button in the center and controls the volume and mode of the sound system. Pushing the top of the rocker switch will increase the volume, and pushing the bottom of the rocker switch will decrease the volume.

Pushing the center button will make the radio switch between the various modes available (AM/FM/SAT/AUX, etc.)

The left-hand control is a rocker-type switch with a push-button in the center. The function of the left-hand control is different depending on which mode you are in.

The following describes the left-hand control operation in each mode.

Radio Operation

Pushing the top of the switch will “Seek” up for the next listenable station and pushing the bottom of the switch will “Seek” down for the next listenable station.

The button located in the center of the left-hand control will tune to the next preset station that you have programmed in the radio preset button.

RADIO OPERATION AND MOBILE PHONES

Under certain conditions, the mobile phone being on in your vehicle can cause erratic or noisy performance from your radio. This condition may be lessened or eliminated by relocating the mobile phone antenna. This condition is not harmful to the radio. If your radio performance does not satisfactorily “clear” by the repositioning of the antenna, it is recommended that the radio volume be turned down or off during mobile phone operation when not using Uconnect® (if equipped).

CLIMATE CONTROLS

The air conditioning and heating system is designed to make you comfortable in all types of weather. This system can be operated through either the controls on the instrument panel or through the Uconnect® system display.

When the Uconnect® system is in different modes (Radio, Player, Settings, More, etc.) the driver and passenger temperature settings will be indicated at the top of the display.

Manual Climate Controls With Touchscreen — If Equipped

Buttons On Your Uconnect® Faceplate

The buttons on the faceplate are located below the Uconnect® screen.

Uconnect® Manual Climate Controls — Buttons On The Faceplate

Buttons On Your Uconnect® Touchscreen

The buttons on the touchscreen are accessible on the Uconnect® system screen.

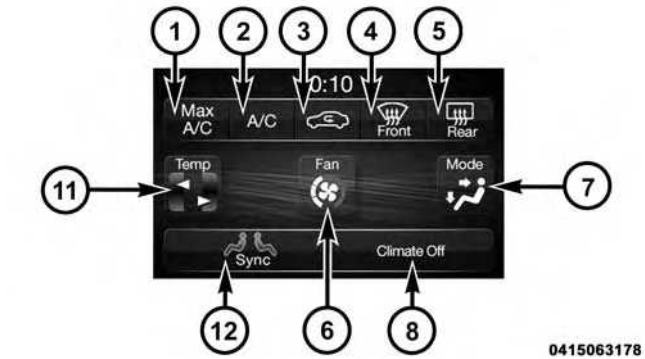

Uconnect® 5.0 Manual Temperature Controls — Buttons On The Touchscreen

Button Descriptions (Applies To Both The Buttons On Your Faceplate And The Buttons On Your Touchscreen)

1. MAX A/C Button

Push and release to change the current setting, the indicator illuminates when MAX A/C is ON. Performing this function again will cause the MAX A/C operation to switch into manual mode and the MAX A/C indicator will turn off.

2. A/C Button

Push and release to change the current setting, the indicator illuminates when A/C is ON. Performing this function again will cause the A/C operation to switch into manual mode and the A/C indicator will turn off.

3. Recirculation Button

Push and release to change the current setting, the indicator illuminates when ON.

4. Front Defrost Button

Push and release to change the current airflow setting to Defrost mode. The indicator illuminates when this feature is ON. Air comes from the windshield and side window demist outlets. When the defrost button is selected, the blower level will increase. Use Defrost mode with maximum temperature settings for best windshield and side window defrosting and defogging.

5. Rear Defrost Button

Push and release this button to turn on the rear window defroster and the heated outside mirrors (if equipped). An indicator will illuminate when the rear window defroster is on. The rear window defroster automatically turns off after 10 minutes. For each additional push of this button, five additional minutes will be added to the timer function.

CAUTION!

Failure to follow these cautions can cause damage to the heating elements:

- **Use care when washing the inside of the rear window. Do not use abrasive window cleaners on the interior surface of the window. Use a soft cloth and a mild washing solution, wiping parallel to the heating elements. Labels can be peeled off after soaking with warm water.**
- **Do not use scrapers, sharp instruments, or abrasive window cleaners on the interior surface of the window.**
- **Keep all objects a safe distance from the window.**

6. Blower Control

Blower control is used to regulate the amount of air forced through the climate system. There are seven blower speeds available. The speeds can be selected using either the blower control knob on the faceplate or buttons on the touchscreen as follows:

Blower Control Knob On The Faceplate

The blower speed increases as you turn the blower control knob clockwise from the lowest blower setting. The blower speed decreases as you turn the blower control knob counterclockwise.

Buttons On The Touchscreen

Use the small blower icon to reduce the blower setting and the large blower icon to increase the blower setting. Blower can also be selected by pressing the blower bar area between the icons.

7. Modes

The airflow distribution mode can be adjusted so air comes from the instrument panel outlets, floor outlets, and demist outlets. The Mode settings are as follows:

- **Panel Mode**

Air comes from the outlets in the instrument panel. Each of these outlets can be individually adjusted to direct the flow of air. The air vanes of the center outlets and outboard outlets can be moved up and down or side to side to regulate airflow direction. There is a shut off wheel located below the air vanes to shut off or adjust the amount of airflow from these outlets.

- **Bi-Level Mode**

Air comes from the instrument panel outlets and floor outlets. A slight amount of air is directed through the defrost and side window demister outlets.

NOTE: BI-LEVEL mode is designed under comfort conditions to provide cooler air out of the panel outlets and warmer air from the floor outlets.

- **Floor Mode**

Air comes from the floor outlets. A slight amount of air is directed through the defrost and side window demister outlets.

- **Mix Mode**

Air comes from the floor, defrost and side window demist outlets. This mode works best in cold or snowy conditions.

NOTE: The air conditioning compressor operates in MIX and DEFROST modes even if the A/C button is not pushed. This dehumidifies the air to help dry the windshield. To improve fuel economy, use these modes only when necessary.

8. Climate Control OFF Button

Push and release this button to turn the Climate Control ON/OFF.

9. Driver Temperature Control Up Button

Provides the driver with independent temperature control. Push the button on the faceplate for warmer temperature settings or on the touchscreen, press and slide the temperature bar button into the red area for warmer temperature settings.

NOTE: In Sync mode, this button will also automatically adjust the passenger temperature setting at the same time.

10. Passenger Temperature Control Up Button

Provides the passenger with independent temperature control. Push the button on the faceplate for warmer

temperature settings or on the touchscreen, press and slide the temperature bar button into the red area for warmer temperature settings.

NOTE: In Sync mode, this button will also automatically adjust the passenger temperature setting at the same time.

11. Temperature Control

Press the temperature button on the touchscreen to regulate the temperature of the air inside the passenger compartment. Moving the temperature bar into the red area, indicates warmer temperatures. Moving the temperature bar into the blue area indicates cooler temperatures.

12. SYNC

Press the Sync button on the touchscreen to toggle the Sync feature On/Off. The Sync indicator is illuminated when this feature is enabled. Sync is used to synchronize the passenger temperature setting with the driver temperature setting. Changing the passenger temperature setting while in Sync will automatically exit this feature.

13. Passenger Temperature Control Down Button

Provides the passenger with independent temperature control. Push the button on the faceplate for cooler temperature settings or on the touchscreen, press and slide the temperature bar button into the blue area for cooler temperature settings.

NOTE: In Sync mode, this button will also automatically adjust the passenger temperature setting at the same time.

14. Driver Temperature Control Down Button

Provides the passenger with independent temperature control. Push the button on the faceplate for cooler

temperature settings or on the touchscreen, press and slide the temperature bar button into the blue area for cooler temperature settings.

NOTE: In Sync mode, this button will also automatically adjust the passenger temperature setting at the same time.

Climate Control Functions

A/C (Air Conditioning)

The Air Conditioning (A/C) button allows the operator to manually activate or deactivate the air conditioning system. When the air conditioning system is turned on, cool dehumidified air will flow through the outlets into the cabin. For improved fuel economy, press the A/C button to turn off the air conditioning and manually adjust the blower and airflow mode settings. Also, make sure to select only Panel, Bi-Level or Floor modes.

NOTE:

- For Manual Climate Controls, if the system is in Mix, Floor or Defrost Mode, the A/C can be turned off, but the A/C system shall remain active to prevent fogging of the windows.
- If fog or mist appears on the windshield or side glass, select Defrost mode and adjust blower speed if needed.
- If your air conditioning performance seems lower than expected, check the front of the A/C condenser (located in front of the radiator), for an accumulation of dirt or insects. Clean with a gentle water spray from behind the radiator and through the condenser. Fabric front fascia protectors may reduce airflow to the condenser, reducing air conditioning performance.

MAX A/C

MAX A/C sets the control for maximum cooling performance.

Press and release to toggle between MAX A/C and the prior settings. The button on the touchscreen illuminates when MAX A/C is ON.

In MAX A/C, the blower level and mode position can be adjusted to desired user settings. Pressing other settings will cause the MAX A/C operation to switch to the prior settings and the MAX A/C indicator will turn off.

Recirculation Control

When outside air contains smoke, odors, or high humidity, or if rapid cooling is desired, you may wish to recirculate interior air by pressing the Recirculation control button. The recirculation indicator will illuminate when this button is selected. Push the button a second time to turn off the Recirculation mode and allow outside air into the vehicle.

NOTE: In cold weather, use of Recirculation mode may lead to excessive window fogging. The recirculation feature may be unavailable (button on touchscreen greyed out) if conditions exist that could create fogging on the inside of the windshield. On systems with Manual Climate Controls, the Recirculation mode is not allowed in Defrost mode to improve window clearing operation. Recirculation will be disabled automatically if this mode is selected. Attempting to use Recirculation while in this mode will cause the LED in the control button to blink and then turn off.

Dual Zone Automatic Climate Controls With Touchscreen — If Equipped

Buttons On The Faceplate

The buttons on the faceplate are located below the Uconnect® screen.

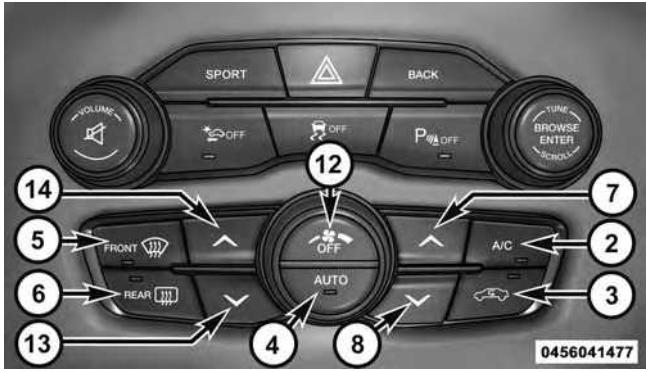

Automatic Climate Controls — Buttons On The Faceplate

Buttons On The Touchscreen

Buttons on the touchscreen are accessible on the Uconnect® system screen.

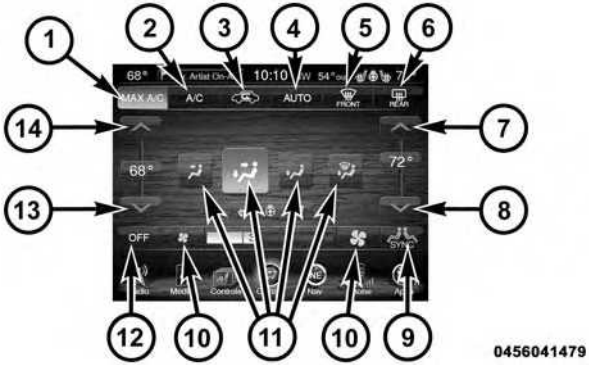

Uconnect® 8.4 Automatic Temperature Controls — Buttons On The Touchscreen

Button Descriptions (Applies To Both Buttons On The Faceplate And Buttons On The Touchscreen)

1. MAX A/C Button

Press and release to change the current setting, the indicator illuminates when MAX A/C is ON. Performing this function again will cause the MAX A/C operation to switch into manual mode and the MAX A/C indicator will turn off.

2. A/C Button

Press and release to change the current setting, the indicator illuminates when A/C is ON. Performing this function again will cause the A/C operation to switch into manual mode and the A/C indicator will turn off.

3. Recirculation Button

Press and release to change the current setting, the indicator illuminates when ON.

4. AUTO Operation Button

Automatically controls the interior cabin temperature by adjusting airflow distribution and amount. Performing this function will cause the system to switch between manual mode and automatic modes. Refer to "Automatic Operation" for more information.

5. Front Defrost Button

Press and release to change the current airflow setting to Defrost mode. The indicator illuminates when this feature is ON. Air comes from the windshield and side window demist outlets. When the defrost button is selected, the blower level will increase. Use Defrost mode with maximum temperature settings for best windshield and side window defrosting and defogging. Performing this function will cause the Automatic Temperature Control (ATC) to switch into manual mode. If the front defrost mode is turned off the climate system will return the previous setting.

6. Rear Defrost Button

Press and release this button to turn on the rear window defroster and the heated outside mirrors (if equipped). An indicator will illuminate when the rear window defroster is on. The rear window defroster automatically turns off after 10 minutes.

CAUTION!

Failure to follow these cautions can cause damage to the heating elements:

- **Use care when washing the inside of the rear window. Do not use abrasive window cleaners on the interior surface of the window. Use a soft cloth and a mild washing solution, wiping parallel to the heating elements. Labels can be peeled off after soaking with warm water.**

(Continued)

CAUTION! *(Continued)*

- **Do not use scrapers, sharp instruments, or abrasive window cleaners on the interior surface of the window.**
- **Keep all objects a safe distance from the window.**

7. Passenger Temperature Control Up Button (Uconnect® 8.4 Only)

Provides the passenger with independent temperature control. Push the button on the faceplate for warmer temperature settings or on the touchscreen, press and slide the temperature bar button towards the red arrow for warmer temperature settings.

NOTE: Pressing this button while in Sync mode will automatically exit Sync.

8. Passenger Temperature Control Down Button (Uconnect® 8.4 Radio Only)

Provides the passenger with independent temperature control. Push the button on the faceplate for cooler temperature settings or on the touchscreen, press and slide the temperature bar button towards the blue arrow for cooler temperature settings.

NOTE: Pressing this button while in Sync mode will automatically exit Sync.

9. SYNC

Press the Sync button on the touchscreen to toggle the Sync feature On/Off. The Sync indicator is illuminated when this feature is enabled. Sync is used to synchronize the passenger temperature setting with the driver temperature setting. Changing the passenger temperature setting while in Sync will automatically exit this feature.

10. Blower Control

Blower control is used to regulate the amount of air forced through the climate system. There are seven blower speeds available. Adjusting the blower will cause automatic mode to switch to manual operation. The speeds can be selected using either the blower control knob on the faceplate or the buttons on the touchscreen as follows:

Blower Control Knob On The Faceplate

The blower speed increases as you turn the blower control knob clockwise from the lowest blower setting. The blower speed decreases as you turn the blower control knob counterclockwise.

Button On The Touchscreen

Use the small blower icon to reduce the blower setting and the large blower icon to increase the blower setting. Blower can also be selected by pressing the blower bar area between the icons.

11. Modes

The airflow distribution mode can be adjusted so air comes from the instrument panel outlets, floor outlets, defrost outlets and demist outlets. The Mode settings are as follows:

- **Panel Mode**

Air comes from the outlets in the instrument panel. Each of these outlets can be individually adjusted to direct the flow of air. The air vanes of the center outlets and outboard outlets can be moved up and down or side to side to regulate airflow direction. There is a shut off wheel located below the air vanes to shut off or adjust the amount of airflow from these outlets.

- **Bi-Level Mode**

Air comes from the instrument panel outlets and floor outlets. A slight amount of air is directed through the defrost and side window demister outlets.

NOTE: BI-LEVEL mode is designed under comfort conditions to provide cooler air out of the panel outlets and warmer air from the floor outlets.

- **Floor Mode**

Air comes from the floor outlets. A slight amount of air is directed through the defrost and side window demister outlets.

- **Mix Mode**

Air comes from the floor, defrost and side window demist outlets. This mode works best in cold or snowy conditions.

12. Climate Control OFF Button

Press and release this button to turn the Climate Control ON/OFF.

13. Driver Temperature Control Down Button (Uconnect® 8.4 Only)

Provides the driver with independent temperature control. Push the button on the faceplate for cooler temperature settings or on the touchscreen, press and slide the temperature bar button towards the blue arrow for cooler temperature settings.

NOTE: In Sync mode, this button will also automatically adjust the passenger temperature setting at the same time.

14. Driver Temperature Control Up Button (Uconnect® 8.4 Only)

Provides the driver with independent temperature control. Push the button on the faceplate for warmer temperature settings or on the touchscreen, press and slide the temperature bar button towards the red arrow for warmer temperature settings.

NOTE: In Sync mode, this button will also automatically adjust the passenger temperature setting at the same time.

Climate Control Functions

A/C (Air Conditioning)

The Air Conditioning (A/C) button allows the operator to manually activate or deactivate the air conditioning system. When the air conditioning system is turned on, cool dehumidified air will flow through the outlets into the cabin. For improved fuel economy, press the A/C button to turn off the air conditioning and manually adjust the blower and airflow mode settings. Also, make sure to select only Panel, Bi-Level or Floor modes.

NOTE:

- If fog or mist appears on the windshield or side glass, select Defrost mode and increase blower speed if needed.

- If your air conditioning performance seems lower than expected, check the front of the A/C condenser (located in front of the radiator), for an accumulation of dirt or insects. Clean with a gentle water spray from the front of the radiator and through the condenser.

MAX A/C

MAX A/C sets the control for maximum cooling performance.

Press and release to toggle between MAX A/C and the prior settings. The button illuminates when MAX A/C is ON.

In MAX A/C, the blower level and mode position can be adjusted to desired user settings. Pressing other settings will cause the MAX A/C operation to switch to the selected setting and MAX A/C to exit.

Recirculation

When outside air contains smoke, odors, or high humidity, or if rapid cooling is desired, you may wish to recirculate interior air by pressing the Recirculation control button. The recirculation indicator will illuminate when this button is selected. Press the button a second time to turn off the Recirculation mode and allow outside air into the vehicle.

NOTE: In cold weather, use of Recirculation mode may lead to excessive window fogging. The recirculation feature may be unavailable (button on touchscreen greyed out). The Recirculation mode is not allowed in Defrost mode to improve window clearing operation. Recirculation will be disabled automatically if this mode is selected. Attempting to use Recirculation while in this mode will cause the LED in the control button to blink and then turn off.

Automatic Temperature Control (ATC)

Automatic Operation

1. Press the AUTO button on the faceplate or the AUTO button on the touchscreen on the Automatic Temperature Control (ATC) Panel.
2. Next, adjust the temperature you would like the system to maintain by adjusting the driver and passenger temperature control buttons. Once the desired temperature is displayed, the system will achieve and automatically maintain that comfort level.
3. When the system is set up for your comfort level, it is not necessary to change the settings. You will experience the greatest efficiency by simply allowing the system to function automatically.

NOTE:

- It is not necessary to move the temperature settings. The system automatically adjusts the temperature, mode, and blower speed to provide comfort as quickly as possible.
- The temperature can be displayed in U.S. or Metric units by selecting the US/M customer-programmable feature. Refer to the “Uconnect® System Settings” in this section of the manual.

To provide you with maximum comfort in the Automatic mode, during cold start-ups the blower fan will remain on low until the engine warms up. The blower will increase in speed and transition into Auto mode.

Manual Operation Override

The system allows for manual selection of blower speed, air distribution mode, A/C status and recirculation control.

The blower fan speed can be set to any fixed speed by adjusting the blower control. The fan will now operate at a fixed speed until additional speeds are selected. This allows the front occupants to control the volume of air circulated in the vehicle and cancel the Auto mode.

The operator can also select the direction of the airflow by selecting one of the available mode settings. A/C operation and Recirculation control can also be manually selected in Manual operation.

NOTE: Each of these features operates independently from each other. If any feature is controlled manually, temperature control will continue to operate automatically.

Operating Tips

NOTE: Refer to the chart at the end of this section for suggested control settings for various weather conditions.

Summer Operation

The engine cooling system must be protected with a high-quality antifreeze coolant to provide proper corrosion protection and to protect against engine overheating. A solution of 50% OAT (Organic Additive Technology) coolant that meets the requirements of Chrysler Material Standard MS.90032 and 50% water is recommended. Refer to “Maintenance Procedures” in “Maintaining Your Vehicle” for proper coolant selection.

Winter Operation

Use of the air Recirculation mode during winter months is not recommended because it may cause window fogging.

Vacation Storage

Any time you store your vehicle or keep it out of service (i.e., vacation) for two weeks or more, run the air conditioning system at idle for about five minutes in the

fresh air and high blower setting. This will ensure adequate system lubrication to minimize the possibility of compressor damage when the system is started again.

Window Fogging

Interior fogging on the windshield can be quickly removed by turning the mode selector to Defrost. The Defrost/Floor mode can be used to maintain a clear windshield and provide sufficient heating. If side window fogging becomes objectionable, increase blower speed to improve airflow and clearing of the side windows. Vehicle windows tend to fog on the inside in mild but rainy or humid weather.

NOTE:

- Recirculate without A/C should not be used for long periods, as fogging may occur.
- Automatic Temperature Controls (ATC) will automatically adjust the climate control settings to reduce or eliminate window fogging on the front windshield. When this occurs, recirculation will be unavailable.

Outside Air Intake

Make sure the air intake, located directly in front of the windshield, is free of obstructions such as leaves. Leaves collected in the air intake may reduce airflow, and if they enter the plenum, they could plug the water drains. In winter months, make sure the air intake is clear of ice, slush, and snow.

A/C Air Filter

The climate control system filters outside air containing dust, pollen and some odors. Strong odors cannot be totally filtered out. Refer to “Maintenance Procedures” in “Maintaining Your Vehicle” for filter replacement instructions.

Manual Control Setting Suggestions for Various Weather Conditions

WEATHER	CONTROL SETTINGS
HOT WEATHER AND VEHICLE INTERIOR IS VERY HOT	Open the windows, start the vehicle, set the Mode control to Panel or Bi-Level, and turn on A/C. Set the Fan control to the High position (full clockwise). Set the temperature control to full cool. After the hot air is flushed from the vehicle, set the Mode control to Recirculate with A/C on and roll up the windows. Once you are comfortable, set the Mode control to Panel or Bi-Level with A/C on.
WARM WEATHER	If it's sunny, set the Mode control to Panel and turn on A/C. If it's cloudy or dark, set the Mode control to Bi-Level with A/C on. Adjust Temperature control for comfort.
COOL OR COLD HUMID CONDITIONS	Set the Mode control to Mix or Defrost. Set the Fan Control to the High position (full clockwise). Adjust Fan and Temperature control for comfort if windows are clear.
COLD DRY CONDITIONS	Set the Mode control to Floor. If it's sunny, you may want more upper air. In this case, set the Mode control to Bi-Level. In very cold weather, if you need extra heat at the windshield, set the Mode control to Mix or Defrost as needed. Adjust Fan and Temperature control for comfort. 045636890

Uconnect® VOICE RECOGNITION QUICK TIPS

Introducing Uconnect®

Start using Uconnect® Voice Recognition with these helpful quick tips. It provides the key Voice Commands and tips you need to know to control your Uconnect® 5.0 or 8.4A/8.4AN system.

Uconnect® 5.0

Key Features:

- 5″ touchscreen
- Three buttons on either side of the display

Uconnect® 8.4AN

If you see the HD icon on your touchscreen, you have the Uconnect® 8.4AN system. If not, you have a Uconnect® 8.4A system.

Get Started

All you need to control your Uconnect® system with your voice are the buttons on your steering wheel.

1. Visit **UconnectPhone.com** to check mobile device and feature compatibility and to find phone pairing instructions.
2. Reduce background noise. Wind and passenger conversations are examples of noise that may impact recognition.
3. Speak clearly at a normal pace and volume while facing straight ahead. The microphone is positioned on the rearview mirror and aimed at the driver.
4. Each time you give a Voice Command, you must first push either the VR or Phone button, wait until **after** the beep, then say your Voice Command.
5. You can interrupt the help message or system prompts by pushing the VR or Phone button and saying a Voice Command from current category.

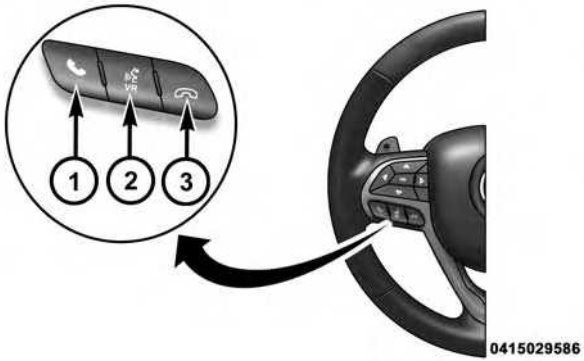

Uconnect® Voice Command

1 — Push To Initiate Or To Answer A Phone Call, Send Or Receive A Text
2 — For all radios: Push To Begin Radio or Media functions. For 8.4A/8.4AN only: Push to begin Navigation, Apps And Climate Functions
3 — Push To End Call

Basic Voice Commands

The basic Voice Commands below can be given at any point while using your Uconnect® system.

Push the VR button VR. After the beep, say...

- **Cancel** to stop a current voice session
- **Help** to hear a list of suggested Voice Commands
- **Repeat** to listen to the system prompts again

Notice the visual cues that inform you of your voice recognition system's status. Cues appear on the touch-screen.

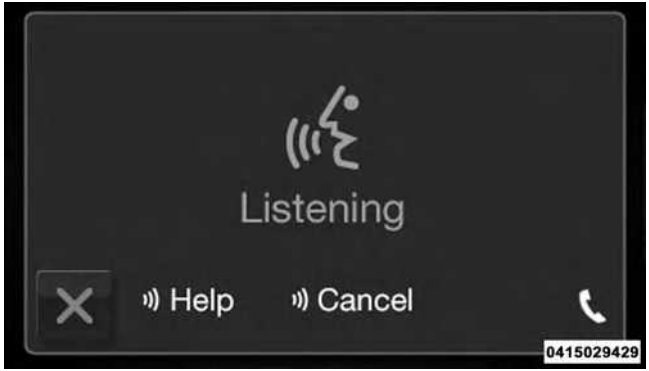

Uconnect® 5.0

Uconnect® 8.4A/8.4AN

Radio

Use your voice to quickly get to the AM, FM or SiriusXM Satellite Radio® stations you would like to hear. (Subscription or included SiriusXM Satellite Radio® trial required.)

Push the VR button VR. After the beep, say...

- **Tune to** ninety-five-point-five FM

- **Tune to** Satellite Channel Hits 1

TIP: At any time, if you are not sure of what to say or want to learn a Voice Command, press the VR button VR and say **"Help."** The system will provide you with a list of commands.

Uconnect® 5.0 Radio

Uconnect® 8.4A/8.4AN Radio

4

Media

Uconnect® offers connections via USB, SD, Bluetooth® and auxiliary ports (If Equipped). Voice operation is only available for connected USB and iPod® devices. (Remote CD player optional and not available on all vehicles.)

Push the VR button . After the beep, say one of the following commands and follow the prompts to switch your media source or choose an artist.

- **Change source** to Bluetooth®
- **Change source** to iPod®
- **Change source** to USB
- **Play artist** Beethoven; **Play album** Greatest Hits; **Play song** Moonlight Sonata; **Play genre** Classical

TIP: Press the Browse button on the touchscreen to see all of the music on your iPod® or USB device. Your Voice Command must match **exactly** how the artist, album, song and genre information is displayed.

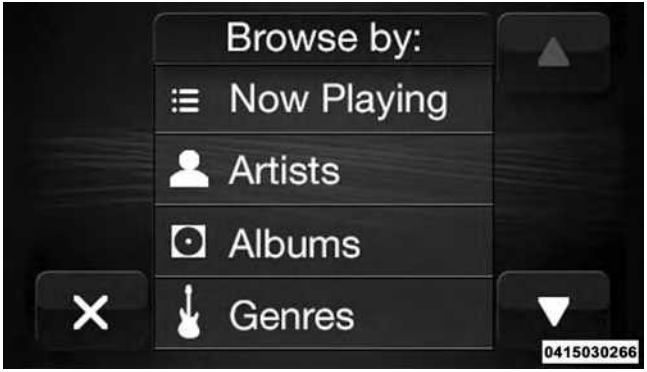

Uconnect® 5.0 Media

Uconnect® 8.4A/8.4AN Media

Phone

Making and answering hands-free phone calls is easy with Uconnect®. When the Phonebook button is illuminated on your touchscreen, your system is ready. Check UconnectPhone.com for mobile phone compatibility and pairing instructions.

Push the Phone button . After the beep, say one of the following commands...

- **Call** John Smith
- **Dial** 123-456-7890 and follow the system prompts
- **Redial** (call previous outgoing phone number)
- **Call back** (call previous incoming phone number)

TIP: When providing a Voice Command, push the Phone button and say **"Call,"** then pronounce the name **exactly** as it appears in your phone book. When a contact has multiple phone numbers, you can say **"Call** John Smith **work."**

Uconnect® 5.0 Phone

Uconnect® 8.4A/8.4AN Phone

Voice Text Reply

Uconnect® will announce **incoming** text messages. Push the Phone button and say **Listen.** (Must have compatible mobile phone paired to Uconnect® system.)

1. Once an incoming text message is read to you, push the Phone button . After the beep, say: **"Reply."**
2. Listen to the Uconnect® prompts. After the beep, repeat one of the pre-defined messages and follow the system prompts.

PRE-DEFINED VOICE TEXT REPLY RESPONSES		
Yes.	Stuck in Traffic.	See you later.
No.	Start without me.	I'll be Late.
Okay.	Where are you?	I will be <number> minutes late.
Call me.	Are you there yet?	
I'll call you later.	I need directions.	See you in <number> of minutes.
I'm on my way.	Can't talk right now.	
I'm lost.		Thanks.

TIP: Your mobile phone must have the full implementation of the **Message Access Profile (MAP)** to take advantage of this feature. For details about MAP, visit UconnectPhone.com**. Apple iPhone® iOS6 or later supports reading incoming text messages only.**

Climate (8.4A/8.4AN)

Too hot? Too cold? Adjust vehicle temperatures hands-free and keep everyone comfortable while you keep moving ahead. (If vehicle is equipped with climate control.)

Push the VR button . After the beep, say one of the following commands:

- **Set driver temperature to** 70 **degrees**
- **Set passenger temperature to** 70 **degrees**

TIP: Voice Command for Climate may only be used to adjust the interior temperature of your vehicle. Voice Command will not work to adjust the heated seats or steering wheel if equipped.

Uconnect 8.4A/8.4AN Climate

Navigation (8.4A/8.4AN)

The Uconnect® navigation feature helps you save time and become more productive when you know exactly how to get to where you want to go. (Navigation is optional on the Uconnect® 8.4A system. See your dealer to activate navigation at any time.)

1. To enter a destination, push the VR button . After the beep, say:
   - For the 8.4A Uconnect® System, say: **"Enter state."**
   - For the 8.4AN Uconnect® System, say: **"Navigate to** 800 Chrysler Drive Auburn Hills, Michigan."
2. Then follow the system prompts.

TIP: To start a POI search, push the VR button . After the beep, say: " **Find nearest** coffee shop."

Uconnect® 8.4A/8.4AN Navigation

Uconnect® Access* (8.4A/8.4AN)

An included trial and/or subscription is required to take advantage of the Uconnect® Access services in the next section of this guide. To register with Uconnect® Access, press the Apps button on the 8.4-inch touchscreen to get started. Detailed registration instructions can be found on the next page.

*Uconnect® Access is available only on equipped vehicles purchased within the continental United States and Alaska. Services can only be used where coverage is available; see coverage map for details.

9-1-1 Call

Theft Alarm Notification

Remote Door Lock/Unlock

Stolen Vehicle Assistance

Remote Vehicle Start**

Remote Horn and Lights

Yelp® Search

Voice Texting

Roadside Assistance Call

Wi-Fi Hotspot***

**If vehicle is equipped.

***Extra charges apply.

Register (8.4A/8.4AN)

1. Press the **Apps** button on the bottom of the 8.4-inch touchscreen.
2. If a pop-up message appears, press **Register** or go to the **Favorite Apps** menu and press **Uconnect® Registration**.
3. Read through the registration instructions. Enter and confirm your personal email address. Then press **Send**.
4. Check your personal inbox for an email from Uconnect® Access.
5. Click on the link inside the email within **72 hours** and complete the easy online registration process to create a personal Mopar® Owner Connect account linked to your vehicle.

Uconnect® Registration 8.4A/8.4AN

Mobile App (8.4A/8.4AN)

Securely link your mobile device to your vehicle with the Uconnect® Access App. Once you have downloaded the App, you may start your vehicle or lock it from virtually any distance. (Vehicle must be properly equipped with factory-installed Remote Start.)

0415028348

Mobile App

Download the Uconnect® Access App to a compatible Apple® or Android® mobile devices. All you need to do is:

1. After registering with Uconnect® Access, log on to your Mopar® Owner Connect account at moparownerconnect.com.
2. On the Dashboard page, enter your mobile phone number to receive a link to download the App on your mobile device. Or go to iTunes®, or Google Play, and search for the Uconnect® Access App.
3. To activate the App, enter your Mopar Owner Connect user name and password and log in. Your vehicle is then connected to your mobile device.

Voice Texting (8.4A/8.4AN)

1. To send a message, push the Phone button . After the beep, say the following command: **"Send message** to John Smith."
2. Listen to the prompt. After the beep, dictate the message you would like to send. Wait for Uconnect® to process your message.
3. The Uconnect® system will repeat your message and provide a variety of options to add to, delete, send or hear the message again. After the beep, tell Uconnect® what you'd like to do. For instance, if you're happy with your message, after the beep, say: **"Send."**

You must be registered with Uconnect® Access and have a compatible MAP – enabled smartphone to use your voice to send a personalized text message.

TIP:

- Not compatible with iPhone®.
- Messages are limited to 140 characters.
- The Messaging button on the touchscreen must be illuminated to use the feature.

Yelp® (8.4A/8.4AN)

Once registered with Uconnect® Access, you can use your voice to search for the most popular places or things around you.

1. Press the "Apps" button on the touchscreen.
2. Press the "All Apps" button on the touchscreen.
3. Press the "Yelp" button on the touchscreen.
4. Once the YELP® home screen appears on the touchscreen, push the VR button, then say: **"YELP search."**
5. Listen to the system prompts and after the beep, tell Uconnect® the place or business that you'd like Uconnect® to find.

TIP: Once you perform a search, you can reorganize the results by selecting either the Best Match, Rating or Distance tab on the top of the touchscreen display.

Yelp®

SiriusXM Travel Link™ (8.4A/8.4AN)

Need to find a gas station, view local movie listings, check a sports score or the 5 - day weather forecast? SiriusXM Travel Link™ is a suite of services that brings a wealth of information right to your Uconnect® 8.4AN system. (Not available for 8.4A system.)

Push the VR button . After the beep, say one of the following commands:

- **Show fuel prices**
- **Show 5 - day weather forecast**
- **Show extended weather**

TIP: Traffic alerts are not accessible with Voice Command.

SiriusXM Travel Link™

Additional Information

© 2014 Chrysler Group LLC. All rights reserved. Mopar and Uconnect are registered trademarks and Mopar Owner Connect is a trademark of Chrysler Group LLC. Android is a trademark of Google Inc. SiriusXM and all related marks and logos are trademarks of SiriusXM Radio Inc. Yelp, Yelp logo, Yelp burst and related marks are registered trademarks of Yelp.

Uconnect® System Support:

- U.S. residents call 1-877-855-8400 or visit DriveUconnect.com
- Canadian residents call 1-800-465-2001 (English) or 1-800-387-9983 (French) or visit DriveUconnect.ca

Mon. – Fri., 7:00 am – 12:00 am, ET

Sat., 8:00 am – 10:00 pm, ET

Sun., 9:00 am – 5:00 pm, ET

Uconnect® Access Services Support 1-855-792-4241. Please have your Uconnect® Security PIN ready when you call.

STARTING AND OPERATING

CONTENTS

■ STARTING PROCEDURES 393
- □ Automatic Transmission 393
- □ Keyless Enter-N-Go™ 394
- □ Normal Starting. 394
- □ Extreme Cold Weather (Below –20°F Or –29°C) 396
- □ If Engine Fails To Start 396
- □ After Starting 398

■ ENGINE BLOCK HEATER — IF EQUIPPED . . .398

■ AUTOMATIC TRANSMISSION 398
- □ Key Ignition Park Interlock. 400
- □ Brake/Transmission Shift Interlock System . . .400
- □ Eight-Speed Automatic Transmission 401

■ AUTOSTICK 408
- □ Operation 408

■ SPORT MODE — WITHOUT PERFORMANCE CONTROL. 411

■ ALL-WHEEL DRIVE (AWD) — IF EQUIPPED . .411

■ DRIVING ON SLIPPERY SURFACES 412
- □ Acceleration 412
- □ Traction 413

■ DRIVING THROUGH WATER 414
□ Flowing/Rising Water 414
□ Shallow Standing Water 414
■ ELECTRIC POWER STEERING 416
■ FUEL SAVER TECHNOLOGY 5.7L ENGINE ONLY — IF EQUIPPED 417
■ PARKING BRAKE 418
■ BRAKE SYSTEM 420
■ ELECTRONIC BRAKE CONTROL SYSTEM 421
□ Anti-Lock Brake System (ABS) 421
□ Traction Control System (TCS) 423
□ Brake Assist System (BAS) 424
□ Electronic Stability Control (ESC) 425
□ Hill Start Assist (HSA) 428
□ Ready Alert Braking 430
□ Rain Brake Support 430
□ ESC Activation/Malfunction Indicator Light And ESC OFF Indicator Light 431
□ Synchronizing ESC 432
■ TIRE SAFETY INFORMATION 432
□ Tire Markings 432
□ Tire Identification Number (TIN). 436
□ Tire Terminology And Definitions 437
□ Tire Loading And Tire Pressure 439
■ TIRES — GENERAL INFORMATION 444
□ Tire Pressure 444
□ Tire Inflation Pressures 446
□ Tire Pressures For High Speed Operation 447

- Radial Ply Tires 447
- Tire Types 448
- Run Flat Tires — If Equipped 450
- Spare Tires — If Equipped 450
- Tire Spinning 453
- Tread Wear Indicators 453
- Life Of Tire 454
- Replacement Tires 454

■ TIRE CHAINS (TRACTION DEVICES) 456

■ TIRE ROTATION RECOMMENDATIONS 457

■ TIRE PRESSURE MONITOR SYSTEM (TPMS) . .458
- Premium System 460
- General Information 464

■ FUEL REQUIREMENTS 464
- 3.6L Engine — If Equipped. 464
- 5.7L Engine — If Equipped. 465
- Reformulated Gasoline 466
- Gasoline/Oxygenate Blends 466
- E-85 Usage In Non-Flex Fuel Vehicles 467
- MMT In Gasoline 467
- Materials Added To Fuel 468
- Fuel System Cautions. 468
- Carbon Monoxide Warnings 469

■ FLEXIBLE FUEL (3.6L ENGINE ONLY) — IF EQUIPPED 470
- E-85 General Information 470

- Ethanol Fuel (E-85) 470
- Fuel Requirements 471
- Selection Of Engine Oil For Flexible Fuel Vehicles (E-85) And Gasoline Vehicles 472
- Starting 472
- Cruising Range 472
- Replacement Parts 472
- Maintenance 473

■ ADDING FUEL 473

- Emergency Fuel Filler Door Release. 476

■ VEHICLE LOADING 477

- Vehicle Certification Label 477
- Gross Vehicle Weight Rating (GVWR) 478
- Gross Axle Weight Rating (GAWR) 478
- Overloading 478
- Loading 479

■ TRAILER TOWING 479

- Common Towing Definitions 480
- Trailer Hitch Classification 482
- Trailer Towing Weights (Maximum Trailer Weight Ratings) 484
- Trailer And Tongue Weight 484
- Towing Requirements 486
- Towing Tips 491

■ RECREATIONAL TOWING (BEHIND MOTORHOME, ETC.) 492

- Two-Wheel Drive And All-Wheel Drive 492

STARTING PROCEDURES

Before starting your vehicle, adjust your seat, adjust the inside and outside mirrors, fasten your seat belt, and if present, instruct all other occupants to buckle their seat belts.

WARNING!

- **When leaving the vehicle, always make sure the ignition is in the OFF position, remove the Key Fob from the vehicle, and lock the vehicle.**
- **Never leave children alone in a vehicle, or with access to an unlocked vehicle. Leaving children in a vehicle unattended is dangerous for a number of reasons. A child or others could be seriously or fatally injured. Children should be warned not to touch the parking brake, brake pedal or the transmission gear selector.**

(Continued)

WARNING! ***(Continued)***

- **Do not leave the Key Fob in or near the vehicle (or in a location accessible to children), and do not leave the ignition (of a vehicle equipped with Keyless Enter-N-Go™) in the ACC or ON/RUN mode. A child could operate power windows, other controls, or move the vehicle.**

Automatic Transmission

The shift lever must be in the NEUTRAL or PARK position before you can start the engine. Apply the brakes before shifting into any driving gear.

CAUTION!

Damage to the transmission may occur if the following precautions are not observed:

- **Do not shift from REVERSE, PARK, or NEUTRAL into any forward gear when the engine is above idle speed.**
- **Shift into PARK only after the vehicle has come to a complete stop.**
- **Shift into or out of REVERSE only after the vehicle has come to a complete stop and the engine is at idle speed.**
- **Before shifting into any gear, make sure your foot is firmly on the brake pedal.**

Keyless Enter-N-Go™

This feature allows the driver to operate the ignition switch with the push of a button, as long as the Remote Start/Keyless Enter-N-Go™ Key Fob is in the passenger compartment.

Normal Starting

Using The ENGINE START/STOP Button

1. The transmission must be in PARK or NEUTRAL.
2. Press and hold the brake pedal while pushing the ENGINE START/STOP button once.

3. The system takes over and attempts to start the vehicle. If the vehicle fails to start, the starter will disengage automatically after 10 seconds.

4. If you wish to stop the cranking of the engine prior to the engine starting, push the button again.

NOTE: Normal starting of either a cold or a warm engine is obtained without pumping or pressing the accelerator pedal.

To Turn Off The Engine Using ENGINE START/STOP Button

1. Place the shift lever/gear selector in PARK, then press and release the ENGINE START/STOP button.

2. The ignition switch will return to the OFF position.

3. If the shift lever/gear selector is not in PARK, the ENGINE START/STOP button must be held for two seconds or three short presses in a row with the vehicle speed above 5 mph (8 km/h) before the engine will shut off. The ignition switch position will remain in the ACC position until the shift lever/gear selector is in PARK and the button is pressed twice to the OFF position. If the shift lever/gear selector is not in PARK and the ENGINE START/STOP button is pressed once, the DID will display a "Vehicle Not In Park" message and the engine will remain running. Never leave a vehicle out of the PARK position, or it could roll.

NOTE: If the ignition switch is left in the ACC or RUN (engine not running) position and the transmission is in PARK, the system will automatically time out after 30 minutes of inactivity and the ignition will switch to the OFF position.

ENGINE START/STOP Button Functions — With Driver's Foot OFF The Brake Pedal (In PARK Or NEUTRAL Position)

The ENGINE START/STOP button operates similar to an ignition switch. It has three positions, OFF, ACC, RUN. To change the ignition switch positions without starting the vehicle and use the accessories follow these steps:

1. Starting with the ignition in the OFF position:
2. Press the ENGINE START/STOP button once to change the ignition to the ACC position.
3. Press the ENGINE START/STOP button a second time to change the ignition to the RUN position.
4. Press the ENGINE START/STOP button a third time to return the ignition to the OFF position.

Extreme Cold Weather (Below –20°F Or –29°C)

To ensure reliable starting at these temperatures, use of an externally powered electric engine block heater (available from your authorized dealer) is recommended.

If Engine Fails To Start

WARNING!

- **Never pour fuel or other flammable liquid into the throttle body air inlet opening in an attempt to start the vehicle. This could result in flash fire causing serious personal injury.**

(Continued)

WARNING! *(Continued)*

- **Do not attempt to push or tow your vehicle to get it started. Vehicles equipped with an automatic transmission cannot be started this way. Unburned fuel could enter the catalytic converter and once the engine has started, ignite and damage the converter and vehicle.**
- **If the vehicle has a discharged battery, booster cables may be used to obtain a start from a booster battery or the battery in another vehicle. This type of start can be dangerous if done improperly. Refer to "Jump Starting" in "What To Do In Emergencies" for further information.**

Clearing A Flooded Engine (Using ENGINE START/STOP Button)

If the engine fails to start after you have followed the "Normal Starting" or "Extreme Cold Weather" procedures, it may be flooded. To clear any excess fuel:

1. Press and hold the brake pedal.
2. Press the accelerator pedal all the way to the floor and hold it.
3. Push and release the ENGINE START/STOP button once.

The starter motor will engage automatically, run for 10 seconds, and then disengage. Once this occurs, release the accelerator pedal and the brake pedal, wait 10 to 15 seconds, then repeat the "Normal Starting" procedure.

After Starting

The idle speed is controlled automatically and it will decrease as the engine warms up.

ENGINE BLOCK HEATER — IF EQUIPPED

The engine block heater warms the engine, and permits quicker starts in cold weather. Connect the cord to a standard 110-115 Volt AC electrical outlet with a grounded, three-wire extension cord.

The engine block heater must be plugged in at least one hour to have an adequate warming effect on the engine.

The engine block heater cord is routed under the hood on the driver side of the vehicle. It has a removable cap that is located near the air box.

WARNING!

Remember to disconnect the engine block heater cord before driving. Damage to the 110-115 Volt electrical cord could cause electrocution.

AUTOMATIC TRANSMISSION

WARNING!

- **It is dangerous to shift out of PARK or NEUTRAL if the engine speed is higher than idle speed. If your foot is not firmly pressing the brake pedal, the vehicle could accelerate quickly forward or in reverse. You could lose control of the vehicle and hit someone or something. Only shift into gear when the engine is idling normally and your foot is firmly pressing the brake pedal.**

(Continued)

WARNING! *(Continued)*

- **Unintended movement of a vehicle could injure those in or near the vehicle. As with all vehicles, you should never exit a vehicle while the engine is running. Before exiting a vehicle, always apply the parking brake, shift the transmission into PARK, turn the engine OFF, and remove the Key Fob. When the ignition is in the OFF position, the transmission is locked in PARK, securing the vehicle against unwanted movement.**
- **When leaving the vehicle, always make sure the ignition is in the OFF position, remove the key fob from the vehicle, and lock the vehicle.**

WARNING! *(Continued)*

- **Never leave children alone in a vehicle, or with access to an unlocked vehicle. Allowing children to be in a vehicle unattended is dangerous for a number of reasons. A child or others could be seriously or fatally injured. Children should be warned not to touch the parking brake, brake pedal or the transmission gear selector.**
- **Do not leave the Key Fob in or near the vehicle (or in a location accessible to children), and do not leave the ignition in the ACC or ON/RUN position. A child could operate power windows, other controls, or move the vehicle.**

(Continued)

CAUTION!

Damage to the transmission may occur if the following precautions are not observed:

- **Shift into or out of PARK or REVERSE only after the vehicle has come to a complete stop.**
- **Do not shift between PARK, REVERSE, NEUTRAL, or DRIVE when the engine is above idle speed.**
- **Before shifting into any gear, make sure your foot is firmly pressing the brake pedal.**

NOTE: You must press and hold the brake pedal while shifting out of PARK.

Key Ignition Park Interlock

This vehicle is equipped with a Key Ignition Park Interlock which requires the transmission to be in PARK before the engine can be turned off. This helps the driver avoid inadvertently leaving the vehicle without placing the transmission in PARK. This system also locks the transmission in PARK whenever the ignition switch is in the OFF position.

Brake/Transmission Shift Interlock System

This vehicle is equipped with a Brake Transmission Shift Interlock system (BTSI) that holds the shift lever in PARK unless the brakes are applied. To shift the transmission out of PARK, the engine must be running and the brake pedal must be pressed.

The brake pedal must also be pressed to shift from NEUTRAL into DRIVE or REVERSE when the vehicle is stopped or moving at low speeds.

Eight-Speed Automatic Transmission

The transmission gear range (PRNDM) is displayed both on the shift lever and in the Driver Information Display (DID).

To select a gear range, press the lock button on the shift lever and move the lever rearward or forward. You must also press the brake pedal to shift the transmission out of PARK, or to shift from NEUTRAL into DRIVE or REVERSE when the vehicle is stopped or moving at low speeds (refer to "Brake/Transmission Shift Interlock System" in this section). Select the DRIVE range for normal driving.

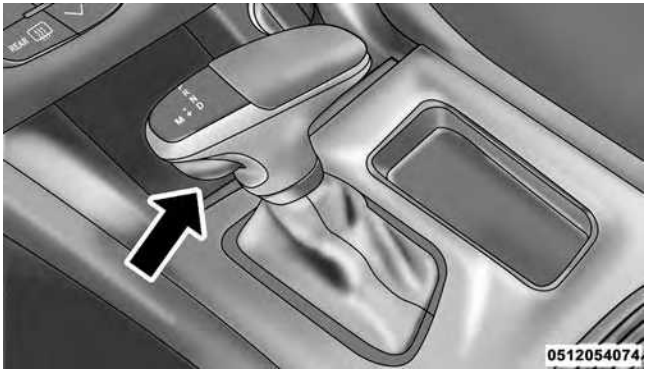

Automatic Transmission Shifter

The electronically-controlled transmission provides a precise shift schedule. The transmission electronics are self-calibrating; therefore, the first few shifts on a new vehicle may be somewhat abrupt. This is a normal condition, and precision shifts will develop within a few hundred miles (kilometers).

Only shift from DRIVE to PARK or REVERSE when the accelerator pedal is released and the vehicle is stopped. Be sure to keep your foot on the brake pedal when shifting between these gears.

The transmission shift lever has PARK, REVERSE, NEUTRAL, DRIVE, and MANUAL (Autostick) shift positions. Manual shifts can be made using the Autostick shift control (refer to "AutoStick" in this section for further information). Toggling the shift lever forward (-) or rearward (+) while in the MANUAL (AutoStick) position (beside the DRIVE position) will manually select the transmission gear, and will display the current gear in the instrument cluster as M1, M2, M3, etc.

NOTE: If the shift lever cannot be moved to the PARK, REVERSE, or NEUTRAL position (when pushed forward) it is probably in the MANUAL (AutoStick, +/-) position (beside the DRIVE position). In MANUAL (AutoStick) mode, the transmission gear is displayed in the instrument cluster (as M1, M2, M3, etc.). Move the shift lever to the right (into the DRIVE [D] position) for access to PARK, REVERSE, and NEUTRAL.

Gear Ranges

DO NOT race the engine when shifting from PARK or NEUTRAL into another gear range.

NOTE: After selecting any gear range, wait a moment to allow the selected gear to engage before accelerating. This is especially important when the engine is cold.

PARK (P)

This range supplements the parking brake by locking the transmission. The engine can be started in this range.

Never attempt to use PARK while the vehicle is in motion. Apply the parking brake when leaving the vehicle in this range.

When parking on a level surface, you may shift the transmission into PARK first, and then apply the parking brake.

When parking on a hill, apply the parking brake before shifting the transmission to PARK. As an added precaution, turn the front wheels toward the curb on a downhill grade and away from the curb on an uphill grade.

WARNING!

- **Never use the PARK position as a substitute for the parking brake. Always apply the parking brake fully when parked to guard against vehicle movement and possible injury or damage.**

(Continued)

WARNING! ***(Continued)***

- **Your vehicle could move and injure you and others if it is not in PARK. Check by trying to move the shift lever out of PARK with the brake pedal released. Make sure the transmission is in PARK before leaving the vehicle.**
- **It is dangerous to shift out of PARK or NEUTRAL if the engine speed is higher than idle speed. If your foot is not firmly pressing the brake pedal, the vehicle could accelerate quickly forward or in reverse. You could lose control of the vehicle and hit someone or something. Only shift into gear when the engine is idling normally and your foot is firmly pressing the brake pedal.**

(Continued)

WARNING! *(Continued)*

- **Unintended movement of a vehicle could injure those in or near the vehicle. As with all vehicles, you should never exit a vehicle while the engine is running. Before exiting a vehicle, always apply the parking brake, shift the transmission into PARK, turn the engine OFF, and remove the key fob. When the ignition is in the OFF position, the transmission is locked in PARK, securing the vehicle against unwanted movement.**
- **When leaving the vehicle, always make sure the ignition is in the OFF position, remove the key fob from the vehicle, and lock the vehicle.**

WARNING! *(Continued)*

- **Never leave children alone in a vehicle, or with access to an unlocked vehicle. Allowing children to be in a vehicle unattended is dangerous for a number of reasons. A child or others could be seriously or fatally injured. Children should be warned not to touch the parking brake, brake pedal or the shift lever.**
- **Do not leave the key fob in or near the vehicle (or in a location accessible to children), and do not leave the ignition in the ACC or ON/RUN position. A child could operate power windows, other controls, or move the vehicle.**

(Continued)

CAUTION!

- **Before moving the shift lever out of PARK, you must start the engine and also press the brake pedal. Otherwise, damage to the shift lever could result.**
- **DO NOT race the engine when shifting from PARK or NEUTRAL into another gear range, as this can damage the drivetrain.**

The following indicators should be used to ensure that you have engaged the transmission into the PARK position:

- When shifting into PARK, press the lock button on the shift lever and firmly move the lever all the way forward until it stops and is fully seated.
- Look at the transmission gear position display and verify that it indicates the PARK position (P).
- With brake pedal released, verify that the shift lever will not move out of PARK.

REVERSE (R)

This range is for moving the vehicle backward. Shift into REVERSE only after the vehicle has come to a complete stop.

NEUTRAL (N)

Use this range when the vehicle is standing for prolonged periods with the engine running. Apply the parking brake and shift the transmission into PARK if you must leave the vehicle.

WARNING!

Do not coast in NEUTRAL and never turn off the ignition to coast down a hill. These are unsafe practices that limit your response to changing traffic or road conditions. You might lose control of the vehicle and have a collision.

CAUTION!

Towing the vehicle, coasting, or driving for any other reason with the transmission in NEUTRAL can cause severe transmission damage. Refer to "Recreational Towing" in "Starting And Operating" and "Towing A Disabled Vehicle" in "What To Do In Emergencies" for further information.

DRIVE (D)

This range should be used for most city and highway driving. It provides the smoothest upshifts and downshifts, and the best fuel economy. The transmission automatically upshifts through all forward gears. The DRIVE position provides optimum driving characteristics under all normal operating conditions.

When frequent transmission shifting occurs (such as when operating the vehicle under heavy loading conditions, in hilly terrain or traveling into strong head winds), use the AutoStick shift control (refer to "AutoStick" in this section for further information) to select a lower gear. Under these conditions, using a lower gear will improve performance and extend transmission life by reducing excessive shifting and heat buildup.

During extremely cold temperatures (-22°F [-30°C] or below), transmission operation may be modified depending on engine and transmission temperature as well as

vehicle speed. Normal operation will resume once the transmission temperature has risen to a suitable level.

MANUAL (M)

The MANUAL (M, +/-) position (beside the DRIVE position) enables full manual control of transmission shifting (also known as AutoStick mode; refer to "AutoStick" in this section for further information). Toggling the shift lever forward (-) or rearward (+) while in the MANUAL (AutoStick) position will manually select the transmission gear, and will display the current gear in the instrument cluster as M1, M2, M3, etc.

Transmission Limp Home Mode

Transmission function is monitored electronically for abnormal conditions. If a condition is detected that could result in transmission damage, Transmission Limp Home Mode is activated. In this mode, the transmission may operate only in certain gears, or may not shift at all. Vehicle performance may be severely degraded and the engine may stall. In some situations, the transmission may not re-engage if the engine is turned off and restarted. The Malfunction Indicator Light (MIL) may be illuminated. A message in the instrument cluster will inform the driver of the more serious conditions, and indicate what actions may be necessary.

In the event of a momentary problem, the transmission can be reset to regain all forward gears by performing the following steps.

NOTE: In cases where the instrument cluster message indicates the transmission may not re-engage after engine shutdown, perform this procedure only in a desired location (preferably, at your authorized dealer).

1. Stop the vehicle.
2. Shift the transmission into PARK, if possible. If not, shift the transmission to NEUTRAL.

3. Press and hold the ignition switch until the engine turns OFF.
4. Wait approximately 30 seconds.
5. Restart the engine.
6. Shift into the desired gear range. If the problem is no longer detected, the transmission will return to normal operation.

NOTE: Even if the transmission can be reset, we recommend that you visit your authorized dealer at your earliest possible convenience. Your authorized dealer has diagnostic equipment to determine if the problem could recur.

If the transmission cannot be reset, authorized dealer service is required.

AUTOSTICK

AutoStick is a driver-interactive transmission feature providing manual shift control, giving you more control of the vehicle. AutoStick allows you to maximize engine braking, eliminate undesirable upshifts and downshifts, and improve overall vehicle performance. This system can also provide you with more control during passing, city driving, cold slippery conditions, mountain driving, trailer towing, and many other situations.

Operation

When the shift lever is in the DRIVE (D) position, the transmission will operate automatically, shifting between the eight available gears. To activate AutoStick, move the shift lever into the MANUAL (M) position (beside the DRIVE position). The current transmission gear will be displayed in the instrument cluster, along with a highlighted "M" (Manual) indication. When the shift lever is in the MANUAL (M) position, tap the shift lever forward

(-) (or tap the (-) shift paddle on the steering wheel, if equipped) to downshift the transmission to the next lower gear, or tap the lever rearward (+) (or tap the (+) shift paddle, if equipped) to command an upshift.

NOTE: Tapping one of the steering wheel-mounted shift paddles (+/-), if equipped, while the shift lever is in DRIVE, will activate a temporary AutoStick mode. Tapping (-) to enter AutoStick mode will downshift the transmission to the next lower gear, while using (+) to enter AutoStick mode will retain the current gear. The current gear will be displayed in the instrument cluster, but the "M" will not be highlighted. The transmission will revert back to normal operation (if the shift lever remains in DRIVE) after a period of time, depending on accelerator pedal activity.

In AutoStick mode, the transmission will shift up or down when (+/-) is manually selected by the driver (using the shift lever, or the shift paddles [if equipped]), unless an engine lugging or overspeed condition would result. It will remain in the selected gear until another upshift or downshift is chosen, except as described below.

- In temporary AutoStick mode (shift lever in DRIVE), the transmission will automatically shift up when maximum engine speed is reached. If the accelerator is fully depressed, the transmission will downshift when possible (based on current vehicle speed and gear, except 6.4L models). Lack of accelerator pedal activity will cause the transmission to revert to automatic operation.
- If normal AutoStick mode is engaged (shift lever in MANUAL position), manual gear selection will be maintained until the shift lever is returned to DRIVE, or as described below. The transmission will not upshift automatically at redline in this mode, nor will downshifts be obtained if the accelerator pedal is pressed to the floor.

- The transmission will automatically downshift as the vehicle slows (to prevent engine lugging) and will display the current gear.
- The transmission will automatically downshift to first gear when coming to a stop. After a stop, the driver should manually upshift (+) the transmission as the vehicle is accelerated.
- You can start out, from a stop, in first or second gear. Tapping (+) (at a stop) will allow starting in second gear. Starting out in second gear can be helpful in snowy or icy conditions.
- If a requested downshift would cause the engine to over-speed, that shift will not occur.
- The system will ignore attempts to upshift at too low of a vehicle speed.
- Holding the (-) paddle depressed (if equipped), or holding the shift lever in the (-) position, will downshift the transmission to the lowest gear possible at the current speed.
- Transmission shifting will be more noticeable when AutoStick is engaged.
- The system may revert to automatic shift mode if a fault or overheat condition is detected.

To disengage AutoStick mode, return the shift lever to the DRIVE position, or press and hold the (+) shift paddle (if equipped, and the shift lever is already in DRIVE) until “D” is once again indicated in the instrument cluster. You can shift in or out of the AutoStick mode at any time without taking your foot off the accelerator pedal.

WARNING!

Do not downshift for additional engine braking on a slippery surface. The drive wheels could lose their grip and the vehicle could skid, causing a collision or personal injury.

SPORT MODE — WITHOUT PERFORMANCE CONTROL

Your vehicle is equipped with a Sport Mode feature. This mode is a configuration set up for typical enthusiast driving. The engine, transmission, and steering systems are all set to their SPORT settings. Sport Mode will provide improved throttle response and modified shifting for an enhanced driving experience, as well the greatest amount of steering feel. This mode may be activated and deactivated by pressing the Sport button on the instrument panel switch bank.

For vehicles equipped with Drive Modes, Refer to "Performance Control — If Equipped" within "Uconnect Settings" in "Understanding Your Instrument Panel" chapter for further information.

ALL-WHEEL DRIVE (AWD) — IF EQUIPPED

This vehicle is equipped with an active on-demand All-Wheel Drive (AWD) system which makes available optimum traction for a wide variety of road surface and driving conditions. The system minimizes wheel slip by automatically redirecting torque to the front and rear wheels as necessary.

To maximize fuel economy, your AWD vehicle automatically defaults to rear-wheel drive (RWD) when road and environmental conditions are such that wheel slip is unlikely to occur. When specific road and environmental conditions require increased levels of road traction, the vehicle automatically shifts into AWD mode. Automatic

AWD operation could be activated by outside temperature, wheel slip, or other predetermined conditions (there may be a slight delay for AWD engagement after a wheel slip condition occurs). AWD can also be manually selected by activating AutoStick mode (+/-), engaging Sport Mode or activating the windshield wipers for an extended period of time. Drive mode, RWD or AWD, can be found in the Driver Information Display (DID). Refer to "Driver Information Display (DID)" in "Understanding Your Instrument Panel" for further information.

NOTE: If the "SERVICE AWD SYSTEM" warning message appears after engine start up, or during driving, it means that the AWD system is not functioning properly and that service is required. Refer to "Driver Information Display (DID)" in "Understanding Your Instrument Panel" for further information.

CAUTION!

All wheels must have the same size and type tires. Unequal tire sizes must not be used. Unequal tire size may cause failure of the front differential and/or the transfer case.

DRIVING ON SLIPPERY SURFACES

Acceleration

Rapid acceleration on snow covered, wet, or other slippery surfaces may cause the driving wheels to pull erratically to the right or left. This phenomenon occurs when there is a difference in the surface traction under the rear (driving) wheels.

WARNING!

Rapid acceleration on slippery surfaces is dangerous. Unequal traction can cause sudden pulling of the rear wheels. You could lose control of the vehicle and possibly have a collision. Accelerate slowly and carefully whenever there is likely to be poor traction (ice, snow, wet mud, loose sand, etc.).

Traction

When driving on wet or slushy roads, it is possible for a wedge of water to build up between the tire and road surface. This is known as hydroplaning and may cause partial or complete loss of vehicle control and stopping ability. To reduce this possibility, the following precautions should be observed:

- Slow down during rainstorms or when the roads are slushy.
- Slow down if the road has standing water or puddles.
- Replace tires when tread wear indicators first become visible.
- Keep tires properly inflated.
- Maintain sufficient distance between your vehicle and the vehicle in front of you to avoid a collision in a sudden stop.

Your vehicle may be equipped with a Limited Slip Differential (LSD) that reduces, but does not eliminate, the amount of wheel slip across a given axle for improved handling.

DRIVING THROUGH WATER

Driving through water more than a few inches/centimeters deep will require extra caution to ensure safety and prevent damage to your vehicle.

Flowing/Rising Water

WARNING!

Do not drive on or across a road or path where water is flowing and/or rising (as in storm run-off). Flowing water can wear away the road or path's surface and cause your vehicle to sink into deeper water. Furthermore, flowing and/or rising water can carry your vehicle away swiftly. Failure to follow this warning may result in injuries that are serious or fatal to you, your passengers, and others around you.

Shallow Standing Water

Although your vehicle is capable of driving through shallow standing water, consider the following Cautions and Warnings before doing so.

WARNING!

- **Driving through standing water limits your vehicle's traction capabilities. Do not exceed 5 mph (8 km/h) when driving through standing water.**
- **Driving through standing water limits your vehicle's braking capabilities, which increases stopping distances. Therefore, after driving through standing water, drive slowly and lightly press on the brake pedal several times to dry the brakes.**
- **Failure to follow these warnings may result in injuries that are serious or fatal to you, your passengers, and others around you.**

CAUTION!

- **Always check the depth of the standing water before driving through it. Never drive through standing water that is deeper than the bottom of the tire rims mounted on the vehicle.**
- **Determine the condition of the road or the path that is under water and if there are any obstacles in the way before driving through the standing water.**
- **Do not exceed 5 mph (8 km/h) when driving through standing water. This will minimize wave effects.**

(Continued)

CAUTION! ***(Continued)***

- **Driving through standing water may cause damage to your vehicle's drivetrain components. Always inspect your vehicle's fluids (i.e., engine oil, transmission, axle, etc.) for signs of contamination (i.e., fluid that is milky or foamy in appearance) after driving through standing water. Do not continue to operate the vehicle if any fluid appears contaminated, as this may result in further damage. Such damage is not covered by the New Vehicle Limited Warranty.**
- **Getting water inside your vehicle's engine can cause it to lock up and stall out, and cause serious internal damage to the engine. Such damage is not covered by the New Vehicle Limited Warranty.**

ELECTRIC POWER STEERING

The electric power steering system will give you good vehicle response and increased ease of maneuverability in tight spaces. The system will vary its assist to provide light efforts while parking and good feel while driving. If the electric steering system experiences a fault that prevents it from providing assist, you will still have the ability to steer the vehicle manually.

Alternate electric power steering efforts can be selected through the Uconnect® System. Refer to "Customer Programmable Features" or "Performance Control — If Equipped" within "Uconnect Settings" in "Understanding Your Instrument Panel" chapter for further information.

WARNING!

Continued operation with reduced assist could pose a safety risk to yourself and others. Service should be obtained as soon as possible.

If the Steering icon is displayed and the "SERVICE POWER STEERING" or the "POWER STEERING ASSIST OFF – SERVICE SYSTEM" message is displayed within the Driver Information Display (DID), this indicates the vehicle needs to be taken to the dealer for service. Refer to "Driver Information Display (DID)" in "Understanding Your Instrument Panel" for further information.

NOTE:

- Even if the power steering assistance is no longer operational, it is still possible to steer the vehicle. Under these conditions there will be a substantial increase in steering effort, especially at low speeds and during parking maneuvers.
- If the condition persists, see your authorized dealer for service.

FUEL SAVER TECHNOLOGY 5.7L ENGINE ONLY — IF EQUIPPED

This feature offers improved fuel economy by shutting off four of the engine's eight cylinders during light load and cruise conditions. The system is automatic with no driver inputs or additional driving skills required.

NOTE: This system may take some time to return to full functionality after a battery disconnect.

PARKING BRAKE

Before leaving the vehicle, make sure that the parking brake is fully applied and place the shift lever/gear selector in the PARK position.

The foot operated parking brake is located below the lower left corner of the instrument panel. To apply the park brake, firmly push the park brake pedal fully. To release the parking brake, press the park brake pedal a second time and let your foot up as you feel the brake disengage.

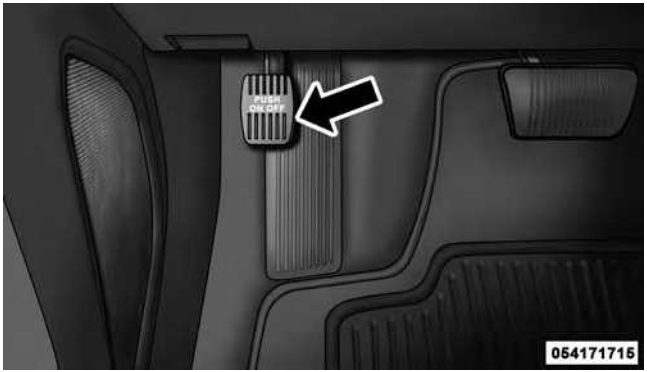

Parking Brake

When the parking brake is applied with the ignition switch in the ON position, the “Brake Warning Light” in the instrument cluster will illuminate.

NOTE:

- When the parking brake is applied and the transmission is placed in gear, the "Brake Warning Light" will flash. If vehicle speed is detected, a chime will sound to alert the driver. Fully release the parking brake before attempting to move the vehicle.
- This light only shows that the parking brake is applied. It does not show the degree of brake application.

When parking on a hill, it is important to turn the front wheels toward the curb on a downhill grade and away from the curb on an uphill grade. Apply the parking brake before placing the shift lever/gear selector in PARK, otherwise the load on the transmission locking mechanism may make it difficult to move the shift lever/gear selector out of PARK. The parking brake should always be applied whenever the driver is not in the vehicle.

WARNING!

- **Never use the PARK position as a substitute for the parking brake. Always apply the parking brake fully when parked to guard against vehicle movement and possible injury or damage.**
- **When leaving the vehicle, always remove the Key Fob from the ignition and lock your vehicle.**
- **Never leave children alone in a vehicle, or with access to an unlocked vehicle. Allowing children to be in a vehicle unattended is dangerous for a number of reasons. A child or others could be seriously or fatally injured. Children should be warned not to touch the parking brake, brake pedal or the shift lever/gear selector.**

(Continued)

WARNING! *(Continued)*

- **Do not leave the Key Fob in or near the vehicle (or in a location accessible to children), and do not leave the ignition of a vehicle equipped with Keyless Enter-N-Go™ in the ACC or ON/RUN mode. A child could operate power windows, other controls, or move the vehicle.**
- **Be sure the parking brake is fully disengaged before driving; failure to do so can lead to brake failure and a collision.**
- **Always fully apply the parking brake when leaving your vehicle, or it may roll and cause damage or injury. Also be certain to leave the transmission in PARK. Failure to do so may allow the vehicle to roll and cause damage or injury.**

CAUTION!

If the "Brake Warning Light" remains on with the parking brake released, a brake system malfunction is indicated. Have the brake system serviced by an authorized dealer immediately.

BRAKE SYSTEM

Your vehicle is equipped with dual hydraulic brake systems. If either of the two hydraulic systems loses normal capability, the remaining system will still function. There will be some loss of overall braking effectiveness. This may be evident by increased pedal travel during application, greater pedal force required to slow or stop, and potential activation of the "Brake Warning Light."

In the event power assist is lost for any reason (for example, repeated brake applications with the engine OFF) the brakes will still function. The effort required to brake the vehicle will be much greater than that required with the power system operating.

NOTE: Your vehicle is equipped with a high performance braking system. The brake pads are a semi-metallic compound, which offer superior fade resistance for consistent operation. A compromise to using this type of brake pad is that the brakes may produce more brake dust and may squeal slightly under certain weather and operating conditions (.i.e., during light brake applications) this is considered normal conditions.

ELECTRONIC BRAKE CONTROL SYSTEM

Your vehicle is equipped with an advanced electronic brake control system that include Anti-Lock Brake System (ABS), Traction Control System (TCS), Brake Assist System (BAS), and the Electronic Stability Control (ESC). All four of these systems work together to enhance vehicle stability and control in various driving conditions.

Also, your vehicle may be equipped with Hill Start Assist (HSA), Ready Alert Braking, and Rain Brake Support.

Anti-Lock Brake System (ABS)

The Anti-Lock Brake System (ABS) provides increased vehicle stability and brake performance under most braking conditions. The system automatically “pumps” the brakes during severe braking conditions to prevent wheel lock-up.

The Electronic Brake Force Distribution (EBD) prevents the rear wheels from over-braking and provides greater control of available braking forces applied to the rear axle.

When the vehicle is driven over 7 mph (11 km/h), you may also hear a slight clicking sound as well as some

related motor noises. These noises are the system performing its self check cycle to ensure that the ABS is working properly. This self check occurs each time the vehicle is started and accelerated past 7 mph (11 km/h).

ABS is activated during braking under certain road or stopping conditions. ABS-inducing conditions can include ice, snow, gravel, bumps, railroad tracks, loose debris, or panic stops.

You also may experience the following when the brake system goes into Anti-Lock:

- The ABS motor running (it may continue to run for a short time after the stop).
- The clicking sound of solenoid valves.
- Brake pedal pulsations.
- A slight drop or fall away of the brake pedal at the end of the stop.

These are all normal characteristics of ABS.

WARNING!

- **The ABS contains sophisticated electronic equipment that may be susceptible to interference caused by improperly installed or high output radio transmitting equipment. This interference can cause possible loss of anti-lock braking capability. Installation of such equipment should be performed by qualified professionals.**
- **Pumping of the Anti-Lock Brakes will diminish their effectiveness and may lead to a collision. Pumping makes the stopping distance longer. Just press firmly on your brake pedal when you need to slow down or stop.**

(Continued)

WARNING! *(Continued)*

- **The ABS cannot prevent the natural laws of physics from acting on the vehicle, nor can it increase braking or steering efficiency beyond that afforded by the condition of the vehicle brakes and tires or the traction afforded.**
- **The ABS cannot prevent collisions, including those resulting from excessive speed in turns, following another vehicle too closely, or hydroplaning.**
- **The capabilities of an ABS equipped vehicle must never be exploited in a reckless or dangerous manner that could jeopardize the user's safety or the safety of others.**

All vehicle wheels and tires must be the same size and type and tires must be properly inflated to produce accurate signals for the computer.

Traction Control System (TCS)

This system monitors the amount of wheel spin of each driven wheel. If wheel spin is detected, brake pressure is applied to the slipping wheel(s) and engine power is reduced to provide enhanced acceleration and stability.

A feature of the TCS system, Brake Limited Differential (BLD), controls the wheel spin across a driven axle. If one wheel on a driven axle is spinning faster than the other, the system will apply the brake of the spinning wheel. This will allow more engine torque to be applied to the wheel that is not spinning. This feature remains active even if TCS and ESC are in the "Sport Mode (Partial Off)" or "Track Mode (Full Off)" mode. Refer to "Electronic Stability Control (ESC)" in this section for more information.

Brake Assist System (BAS)

This system complements the ABS by optimizing the vehicle braking capability during emergency brake maneuvers. This system detects an emergency braking situation by sensing the rate and amount of brake application and then applies optimum pressure to the brakes. This can help reduce braking distances.

Applying the brakes very quickly results in the best BAS assistance. To receive the benefits of this system, you must apply continuous brake pedal pressure during the stopping sequence. Do not reduce brake pedal pressure unless braking is no longer desired. Once the brake pedal is released, the BAS is deactivated.

WARNING!

The BAS cannot prevent the natural laws of physics from acting on the vehicle, nor can it increase the traction afforded by prevailing road conditions. The BAS cannot prevent collisions, including those resulting from excessive speed in turns, driving on very slippery surfaces, or hydroplaning. The capabilities of a BAS-equipped vehicle must never be exploited in a reckless or dangerous manner that could jeopardize the user's safety or the safety of others.

Electronic Stability Control (ESC)

This system enhances directional control and stability of the vehicle under various driving conditions. The ESC corrects for oversteering and understeering the vehicle by applying the brake of the appropriate wheel. Engine power may also be reduced to assist in counteracting the condition of oversteer or understeer and help the vehicle maintain the desired path.

The ESC uses sensors in the vehicle to determine the path that the driver intends to steer the vehicle and compares it to the actual path of the vehicle. When the actual path does not match the intended path, the ESC applies the brake of the appropriate wheel to assist in counteracting the condition of oversteer or understeer.

- Oversteer - when the vehicle is turning more than appropriate for the steering wheel position.
- Understeer - when the vehicle is turning less than appropriate for the steering wheel position.

WARNING!

The Electronic Stability Control (ESC) cannot prevent the natural laws of physics from acting on the vehicle, nor can it increase the traction afforded by prevailing road conditions. ESC cannot prevent all accidents, including those resulting from excessive speed in turns, driving on very slippery surfaces, or hydroplaning. ESC also cannot prevent collisions resulting from loss of vehicle control due to inappropriate driver input for the conditions. Only a safe, attentive, and skillful driver can prevent accidents. The capabilities of an ESC equipped vehicle must never be exploited in a reckless or dangerous manner which could jeopardize the user's safety or the safety of others.

ESC Operating Modes

The ESC system has two or three available operating modes:

ESC On

This is the normal operating mode for the ESC. Whenever the vehicle is started, the ESC system will be in this mode. This mode should be used for most driving conditions. The ESC should only be turned OFF for specific reasons as noted in the following paragraphs.

Partial Off

The "Partial Off" mode is intended for times when a more spirited driving experience is desired. It is also intended for driving in deep snow, sand, or gravel. This mode disables the TCS portion of the ESC and raises the threshold for ESC activation, which allows for more wheel spin than what ESC normally allows.

The "ESC Off" switch is located on the switch bank in the center of the instrument panel. To enter the "Partial Off" mode, momentarily press the "ESC Off" switch and the "ESC off indicator light" will illuminate. To turn the ESC on again, momentarily press the "ESC Off" switch and the "ESC off indicator light" will turn off.

WARNING!

- **When in "Partial Off" mode, the TCS functionality of ESC, (except for the limited slip feature described in the TCS section), has been disabled and the "ESC Off Indicator Light" will be illuminated. When in "Partial Off" mode, the engine power reduction feature of TCS is disabled, and the enhanced vehicle stability offered by the ESC system is reduced.**
- **Trailer Sway control (TSC) is disabled when the ESC system is in the "Partial Off" mode.**

NOTE:

- To improve the vehicle's traction when driving with snow chains, or when starting off in deep snow, sand, or gravel, it may be desirable to switch to the "Partial Off" mode by momentarily pressing the "ESC Off" switch. Once the situation requiring "Partial Off" mode is overcome, turn the ESC on again by momentarily pressing the "ESC Off" switch. This may be done while the vehicle is in motion.
- When in "Partial Off" mode, the TCS functionality of ESC, (except for the limited slip feature described in the TCS section), has been disabled and the "ESC Off Indicator Light" will be illuminated. All other stability features of ESC function normally. When in "Partial Off" mode, the engine power reduction feature of TCS is disabled, and the enhanced vehicle stability offered by the ESC system is reduced.

Full Off — If Equipped

This mode is intended for off-highway or off-road use only and should not be used on any public roadways. In this mode, all TCS and ESC stability features are turned OFF. To enter the "Full Off" mode, press and hold the "ESC Off" switch for five seconds while the vehicle is stopped with the engine running. After five seconds, a chime will sound, the "ESC Off Indicator Lamp" will illuminate, and the "ESC off" message may appear in the Driver Information Display (DID). Refer to "Driver Information Display (DID)" in "Understanding Your Instrument Panel" for further information. To turn ESC ON again, momentarily press the "ESC Off" switch.

WARNING!

In the ESC "Full Off" mode, the engine torque reduction and stability features are disabled. Therefore, the enhanced vehicle stability offered by ESC is unavailable. In an emergency evasive maneuver, the ESC system will not engage to assist in maintaining stability. "ESC Off" mode is intended for off-highway or off-road use only.

Hill Start Assist (HSA)

The HSA system is designed to assist the driver when starting a vehicle from a stop on a hill. HSA will maintain the level of brake pressure the driver applied for a short period of time after the driver takes their foot off of the brake pedal. If the driver does not apply the throttle during this short period of time, the system will release brake pressure and the vehicle will roll down the hill. The system will release brake pressure in proportion to the amount of throttle applied as the vehicle starts to move in the intended direction of travel.

HSA Activation Criteria

The following criteria must be met in order for HSA to activate:

- Vehicle must be stopped.
- Vehicle must be on a 6% (approximate) grade or greater hill.
- Gear selection matches vehicle uphill direction (i.e., vehicle facing uphill is in forward gear; vehicle backing uphill is in REVERSE gear).

HSA will work in REVERSE and all forward gears when the activation criteria have been met. The system will not activate if the vehicle is placed in NEUTRAL or PARK.

WARNING!

There may be situations on minor hills with a loaded vehicle, or while pulling a trailer, when the system will not activate and slight rolling may occur. This could cause a collision with another vehicle or object. Always remember the driver is responsible for braking the vehicle.

Towing With HSA

HSA will provide assistance when starting on a grade when pulling a trailer.

WARNING!

- **If you use a trailer brake controller with your trailer, your trailer brakes may be activated and deactivated with the brake switch. If so, when the brake pedal is released, there may not be enough brake pressure to hold the vehicle and trailer on a hill and this could cause a collision with another vehicle or object behind you. In order to avoid rolling down the hill while resuming acceleration, manually activate the trailer brake prior to releasing the brake pedal. Always remember the driver is responsible for braking the vehicle.**

(Continued)

WARNING! *(Continued)*

- **HSA is not a parking brake. If you stop the vehicle on a hill without putting the transmission in PARK and using the parking brake, it will roll down the hill and could cause a collision with another vehicle or object. Always remember to use the parking brake while parking on a hill, and that the driver is responsible for braking the vehicle.**

HSA Off

If you wish to turn off the HSA system, it can be done in the Uconnect® settings. Refer to "Uconnect® Settings" in "Understanding Your Instrument Panel" for further information.

Ready Alert Braking

Ready Alert Braking may reduce the time required to reach full braking during emergency braking situations. It anticipates when an emergency braking situation may occur by monitoring how fast the throttle is released by the driver. When the throttle is released very quickly, Ready Alert Braking applies a small amount of brake pressure. This brake pressure will not be noticed by the driver. The brake system uses this brake pressure to allow a fast brake response if the driver applies the brakes.

Rain Brake Support

Rain Brake Support may improve braking performance in wet conditions. It will periodically apply a small amount of brake pressure to remove any water buildup on the front brake rotors. It only functions when the windshield wipers are in the LO or HI mode, it does not function in the intermittent mode. When Rain Brake Support is active, there is no notification to the driver and no driver interaction is required.

ESC Activation/Malfunction Indicator Light And ESC OFF Indicator Light

The "ESC Activation/Malfunction Indicator Light" in the instrument cluster will come on when the ignition switch is cycled to the ON position. It should go out with the engine running. If the "ESC Activation/Malfunction Indicator Light" comes on continuously with the engine running, a malfunction has been detected in the ESC system. If this light remains on after several ignition cycles, and the vehicle has been driven several miles (kilometers) at speeds greater than 30 mph (48 km/h), see your authorized dealer as soon as possible to have the problem diagnosed and corrected.

The "ESC Activation/Malfunction Indicator Light" (located in the instrument cluster) starts to flash as soon as the tires lose traction and the ESC system becomes active. The "ESC Activation/Malfunction Indicator Light" also flashes when TCS is active. If the "ESC Activation/Malfunction Indicator Light" begins to flash during acceleration, ease up on the accelerator and apply as little throttle as possible. Be sure to adapt your speed and driving to the prevailing road conditions.

NOTE:

- Each time the ignition is cycled ON, the ESC system will be ON even if it was cycled off previously.
- The ESC system will make buzzing or clicking sounds when it is active. This is normal; the sounds will stop when ESC becomes inactive following the maneuver that caused the ESC activation.

The "ESC OFF Indicator Light" indicates the Electronic Stability Control (ESC) is partially off or full off.

Synchronizing ESC

If the power supply is interrupted (battery disconnected or discharged), the "ESC Activation/Malfunction Indicator Light" may illuminate with the engine running. If this should occur, turn the steering wheel completely to the left and then to the right. The "ESC Activation/ Malfunction Indicator Light" should go out. However, if the light remains on, have the ESC and BAS checked at your authorized dealer as soon as possible.

TIRE SAFETY INFORMATION

Tire Markings

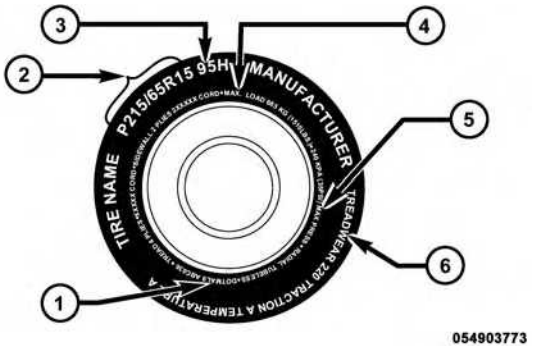

1 — U.S. DOT Safety Standards Code (TIN)	4 — Maximum Load
2 — Size Designation	5 — Maximum Pressure
3 — Service Description	6 — Treadwear, Traction and Temperature Grades

NOTE:

- P (Passenger) — Metric tire sizing is based on U.S. design standards. P-Metric tires have the letter "P" molded into the sidewall preceding the size designation. Example: P215/65R15 95H.
- European — Metric tire sizing is based on European design standards. Tires designed to this standard have the tire size molded into the sidewall beginning with the section width. The letter "P" is absent from this tire size designation. Example: 215/65R15 96H.
- LT (Light Truck) — Metric tire sizing is based on U.S. design standards. The size designation for LT-Metric tires is the same as for P-Metric tires except for the letters "LT" that are molded into the sidewall preceding the size designation. Example: LT235/85R16.
- Temporary spare tires are designed for temporary emergency use only. Temporary high pressure compact spare tires have the letter "T" or "S" molded into the sidewall preceding the size designation. Example: T145/80D18 103M.
- High flotation tire sizing is based on U.S. design standards and it begins with the tire diameter molded into the sidewall. Example: 31x10.5 R15 LT.

Tire Sizing Chart

EXAMPLE:
Example Size Designation: P215/65R15XL 95H, 215/65R15 96H, LT235/85R16C, T145/80D18 103M, 31x10.5 R15 LT
P = Passenger car tire size based on U.S. design standards, or **"....blank...."** = Passenger car tire based on European design standards, or **LT** = Light truck tire based on U.S. design standards, or **T or S** = Temporary spare tire or **31** = Overall diameter in inches (in)
215, 235, 145 = Section width in millimeters (mm)
65, 85, 80 = Aspect ratio in percent (%) – Ratio of section height to section width of tire, or **10.5** = Section width in inches (in)
R = Construction code – "R" means radial construction, or – "D" means diagonal or bias construction
15, 16, 18 = Rim diameter in inches (in)

EXAMPLE:

Service Description:

95 = Load Index

– A numerical code associated with the maximum load a tire can carry

H = Speed Symbol

– A symbol indicating the range of speeds at which a tire can carry a load corresponding to its load index under certain operating conditions

– The maximum speed corresponding to the speed symbol should only be achieved under specified operating conditions (i.e., tire pressure, vehicle loading, road conditions, and posted speed limits)

Load Identification:

Absence of the following load identification symbols on the sidewall of the tire indicates a Standard Load (SL) tire:

- **XL** = Extra load (or reinforced) tire, or
- **LL** = Light load tire or
- **C, D, E, F, G** = Load range associated with the maximum load a tire can carry at a specified pressure

Maximum Load – Maximum load indicates the maximum load this tire is designed to carry

Maximum Pressure – Maximum pressure indicates the maximum permissible cold tire inflation pressure for this tire

Tire Identification Number (TIN)

The TIN may be found on one or both sides of the tire, however, the date code may only be on one side. Tires with white sidewalls will have the full TIN, including the date code, located on the white sidewall side of the tire. Look for the TIN on the outboard side of black sidewall tires as mounted on the vehicle. If the TIN is not found on the outboard side, then you will find it on the inboard side of the tire.

EXAMPLE:
DOT MA L9 ABCD 0301
DOT = Department of Transportation – This symbol certifies that the tire is in compliance with the U.S. Department of Transportation tire safety standards and is approved for highway use
MA = Code representing the tire manufacturing location (two digits)
L9 = Code representing the tire size (two digits)
ABCD = Code used by the tire manufacturer (one to four digits)
03 = Number representing the week in which the tire was manufactured (two digits) – 03 means the 3rd week

EXAMPLE:
DOT MA L9 ABCD 0301
01 = Number representing the year in which the tire was manufactured (two digits) – 01 means the year 2001 – Prior to July 2000, tire manufacturers were only required to have one number to represent the year in which the tire was manufactured. Example: 031 could represent the 3rd week of 1981 or 1991

Tire Terminology And Definitions

Term	Definition
B-Pillar	The vehicle B-Pillar is the structural member of the body located behind the front door.
Cold Tire Inflation Pressure	Cold tire inflation pressure is defined as the tire pressure after the vehicle has not been driven for at least three hours, or driven less than 1 mile (1.6 km) after sitting for a minimum of three hours. Inflation pressure is measured in units of PSI (pounds per square inch) or kPa (kilopascals).

Term	Definition
Maximum Inflation Pressure	The maximum inflation pressure is the maximum permissible cold tire inflation pressure for this tire. The maximum inflation pressure is molded into the sidewall.
Recommended Cold Tire Inflation Pressure	Vehicle manufacturer's recommended cold tire inflation pressure as shown on the tire placard.
Tire Placard	A label permanently attached to the vehicle describing the vehicle's loading capacity, the original equipment tire sizes and the recommended cold tire inflation pressures.

Tire Loading And Tire Pressure

Tire And Loading Information Placard Location

NOTE: The proper cold tire inflation pressure is listed on the driver's side B-Pillar or the rear edge of the driver's side door.

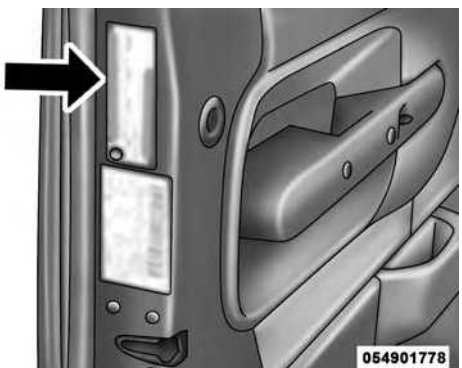

Example Tire Placard Location (Door)

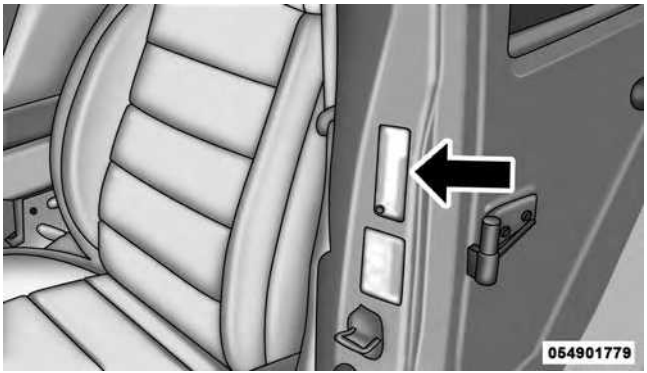

Example Tire Placard Location (B-Pillar)

Tire And Loading Information Placard

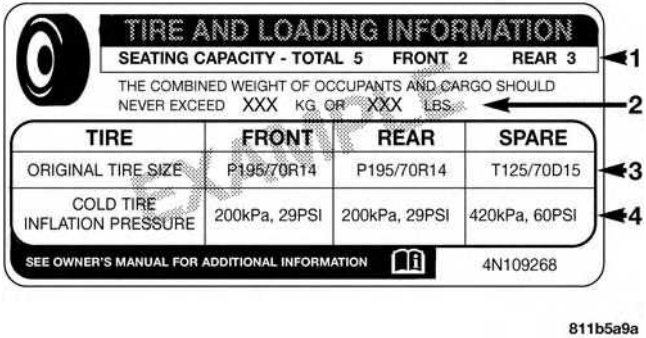

Tire And Loading Information Placard

This placard tells you important information about the:

1. Number of people that can be carried in the vehicle.
2. Total weight your vehicle can carry.
3. Tire size designed for your vehicle.
4. Cold tire inflation pressures for the front, rear, and spare tires.

Loading

The vehicle maximum load on the tire must not exceed the load carrying capacity of the tire on your vehicle. You will not exceed the tire's load carrying capacity if you adhere to the loading conditions, tire size, and cold tire inflation pressures specified on the Tire and Loading Information placard and in the "Vehicle Loading" section of this manual.

NOTE: Under a maximum loaded vehicle condition, gross axle weight ratings (GAWRs) for the front and rear axles must not be exceeded. For further information on GAWRs, vehicle loading, and trailer towing, refer to "Vehicle Loading" in this section.

To determine the maximum loading conditions of your vehicle, locate the statement "The combined weight of occupants and cargo should never exceed XXX lbs or XXX kg" on the Tire and Loading Information placard. The combined weight of occupants, cargo/luggage and trailer tongue weight (if applicable) should never exceed the weight referenced here.

Steps For Determining Correct Load Limit

1. Locate the statement "The combined weight of occupants and cargo should never exceed XXX lbs or XXX kg" on your vehicle's placard.
2. Determine the combined weight of the driver and passengers that will be riding in your vehicle.
3. Subtract the combined weight of the driver and passengers from XXX lbs or XXX kg.

4. The resulting figure equals the available amount of cargo and luggage load capacity. For example, if "XXX" amount equals 1,400 lbs (635 kg) and there will be five 150 lb (68 kg) passengers in your vehicle, the amount of available cargo and luggage load capacity is 650 lbs (295 kg) (since 5 x 150 lbs (68 kg) = 750 lbs (340 kg), and 1400 lbs (635 kg) – 750 lbs (340 kg) = 650 lbs [295 kg]).

5. Determine the combined weight of luggage and cargo being loaded on the vehicle. That weight may not safely exceed the available cargo and luggage load capacity calculated in step 4.

NOTE:

- If your vehicle will be towing a trailer, load from your trailer will be transferred to your vehicle. The following table shows examples on how to calculate total load, cargo/luggage, and towing capacities of your vehicle with varying seating configurations and number and size of occupants. This table is for illustration purposes only and may not be accurate for the seating and load carry capacity of your vehicle.

- For the following example, the combined weight of occupants and cargo should never exceed 865 lbs (392 kg).

Occupants			Combined weight of occupants and cargo from Tire Placard	MINUS	Combined Occupant's weight	=	AVAILABLE Cargo/Luggage and Trailer Tongue Weight
TOTAL	FRONT	REAR					
EXAMPLE 1							
5	2	3	865 lbs	minus	Occupant 1: 200 lbs Occupant 2: 130 lbs Occupant 3: 160 lbs Occupant 4: 100 lbs Occupant 5: 80 lbs TOTAL WEIGHT: 670 lbs 670 lbs	=	195 lbs
EXAMPLE 2							
3	2	1	865 lbs	minus	Occupant 1: 210 lbs Occupant 2: 180 lbs Occupant 3: 150 lbs TOTAL WEIGHT: 540 lbs 540 lbs	=	325 lbs
EXAMPLE 3							
2	2	0	865 lbs	minus	Occupant 1: 200 lbs Occupant 2: 200 lbs TOTAL WEIGHT: 400 lbs 400 lbs	=	465 lbs

EXAMPLE

811a4d11

WARNING!

Overloading of your tires is dangerous. Overloading can cause tire failure, affect vehicle handling, and increase your stopping distance. Use tires of the recommended load capacity for your vehicle. Never overload them.

TIRES — GENERAL INFORMATION

Tire Pressure

Proper tire inflation pressure is essential to the safe and satisfactory operation of your vehicle. Four primary areas are affected by improper tire pressure:

- Safety and Vehicle Stability
- Economy
- Tread Wear
- Ride Comfort

Safety

WARNING!

- **Improperly inflated tires are dangerous and can cause collisions.**
- **Under-inflation increases tire flexing and can result in overheating and tire failure.**
- **Over-inflation reduces a tire's ability to cushion shock. Objects on the road and chuckholes can cause damage that result in tire failure.**
- **Overinflated or under-inflated tires can affect vehicle handling and can fail suddenly, resulting in loss of vehicle control.**
- **Unequal tire pressures can cause steering problems. You could lose control of your vehicle.**

(Continued)

WARNING! ***(Continued)***

- **Unequal tire pressures from one side of the vehicle to the other can cause the vehicle to drift to the right or left.**
- **Always drive with each tire inflated to the recommended cold tire inflation pressure.**

Both under-inflation and over-inflation affect the stability of the vehicle and can produce a feeling of sluggish response or over responsiveness in the steering.

NOTE:

- Unequal tire pressures from side to side may cause erratic and unpredictable steering response.
- Unequal tire pressure from side to side may cause the vehicle to drift left or right.

Fuel Economy

Underinflated tires will increase tire rolling resistance resulting in higher fuel consumption.

Tread Wear

Improper cold tire inflation pressures can cause abnormal wear patterns and reduced tread life, resulting in the need for earlier tire replacement.

Ride Comfort And Vehicle Stability

Proper tire inflation contributes to a comfortable ride. Over-inflation produces a jarring and uncomfortable ride.

Tire Inflation Pressures

The proper cold tire inflation pressure is listed on the driver's side B-Pillar or rear edge of the driver's side door.

At least once a month:

- Check and adjust tire pressure with a good quality pocket-type pressure gauge. Do not make a visual judgement when determining proper inflation. Tires may look properly inflated even when they are under-inflated.
- Inspect tires for signs of tire wear or visible damage.

CAUTION!

After inspecting or adjusting the tire pressure, always reinstall the valve stem cap. This will prevent moisture and dirt from entering the valve stem, which could damage the valve stem.

Inflation pressures specified on the placard are always "cold tire inflation pressure." Cold tire inflation pressure is defined as the tire pressure after the vehicle has not been driven for at least three hours, or driven less than 1 mile (1.6 km) after sitting for a minimum of three hours. The cold tire inflation pressure must not exceed the maximum inflation pressure molded into the tire sidewall.

Check tire pressures more often if subject to a wide range of outdoor temperatures, as tire pressures vary with temperature changes.

Tire pressures change by approximately 1 psi (7 kPa) per 12°F (7°C) of air temperature change. Keep this in mind when checking tire pressure inside a garage, especially in the winter.

Example: If garage temperature = 68°F (20°C) and the outside temperature = 32°F (0°C) then the cold tire

inflation pressure should be increased by 3 psi (21 kPa), which equals 1 psi (7 kPa) for every 12°F (7°C) for this outside temperature condition.

Tire pressure may increase from 2 to 6 psi (13 to 40 kPa) during operation. DO NOT reduce this normal pressure build up or your tire pressure will be too low.

Tire Pressures For High Speed Operation

The manufacturer advocates driving at safe speeds and within posted speed limits. Where speed limits or conditions are such that the vehicle can be driven at high speeds, maintaining correct tire inflation pressure is very important. Increased tire pressure and reduced vehicle loading may be required for high-speed vehicle operation. Refer to your authorized tire dealer or original equipment vehicle dealer for recommended safe operating speeds, loading and cold tire inflation pressures.

WARNING!

High speed driving with your vehicle under maximum load is dangerous. The added strain on your tires could cause them to fail. You could have a serious collision. Do not drive a vehicle loaded to the maximum capacity at continuous speeds above 75 mph (120 km/h).

Radial Ply Tires

WARNING!

Combining radial ply tires with other types of tires on your vehicle will cause your vehicle to handle poorly. The instability could cause a collision. Always use radial ply tires in sets of four. Never combine them with other types of tires.

Tire Repair

If your tire becomes damaged, it may be repaired if it meets the following criteria:

- The tire has not been driven on when flat.
- The damage is only on the tread section of your tire (sidewall damage is not repairable).
- The puncture is no greater than a ¼ of an inch (6 mm).

Consult an authorized tire dealer for tire repairs and additional information.

Damaged Run Flat tires, or Run Flat tires that have experienced a loss of pressure should be replaced immediately with another Run Flat tire of identical size and service description (Load Index and Speed Symbol).

Tire Types

All Season Tires — If Equipped

All Season tires provide traction for all seasons (spring, summer, fall and winter). Traction levels may vary between different all season tires. All season tires can be identified by the M+S, M&S, M/S or MS designation on the tire sidewall. Use all season tires only in sets of four; failure to do so may adversely affect the safety and handling of your vehicle.

Summer Or Three Season Tires — If Equipped

Summer tires provide traction in both wet and dry conditions, and are not intended to be driven in snow or on ice. If your vehicle is equipped with summer tires, be aware these tires are not designed for winter or cold driving conditions. Install winter tires on your vehicle when ambient temperatures are less than 40°F (5°C) or if roads are covered with ice or snow. For more information, contact an authorized dealer.

Summer tires do not contain the all season designation or mountain/snowflake symbol on the tire sidewall. Use summer tires only in sets of four; failure to do so may adversely affect the safety and handling of your vehicle.

WARNING!

Do not use summer tires in snow/ice conditions. You could lose vehicle control, resulting in severe injury or death. Driving too fast for conditions also creates the possibility of loss of vehicle control.

Snow Tires

Some areas of the country require the use of snow tires during the winter. Snow tires can be identified by a "mountain/snowflake" symbol on the tire sidewall.

If you need snow tires, select tires equivalent in size and type to the original equipment tires. Use snow tires only in sets of four; failure to do so may adversely affect the safety and handling of your vehicle.

Snow tires generally have lower speed ratings than what was originally equipped with your vehicle and should not be operated at sustained speeds over 75 mph (120 km/h). For speeds above 75 mph (120 km/h) refer to original equipment or an authorized tire dealer for recommended safe operating speeds, loading and cold tire inflation pressures.

While studded tires improve performance on ice, skid and traction capability on wet or dry surfaces may be poorer than that of non-studded tires. Some states prohibit studded tires; therefore, local laws should be checked before using these tire types.

Run Flat Tires — If Equipped

Run Flat tires allow you the capability to drive 50 miles (80 km) at 50 mph (80 km/h) after a rapid loss of inflation pressure. This rapid loss of inflation is referred to as the Run Flat mode. A Run Flat mode occurs when the tire inflation pressure is of/or below 14 psi (96 kPa). Once a Run Flat tire reaches the run flat mode it has limited driving capabilities and needs to be replaced immediately. A Run Flat tire is not repairable.

It is not recommended driving a vehicle loaded at full capacity or to tow a trailer while a tire is in the run flat mode.

See the tire pressure monitoring section for more information.

Spare Tires — If Equipped

NOTE: For vehicles equipped with Tire Service Kit instead of a spare tire, please refer to "Tire Service Kit" in "What To Do In Emergencies" for further information.

CAUTION!

Because of the reduced ground clearance, do not take your vehicle through an automatic car wash with a compact or limited-use temporary spare installed. Damage to the vehicle may result.

Spare Tire Matching Original Equipped Tire And Wheel — If Equipped

Your vehicle may be equipped with a spare tire and wheel equivalent in look and function to the original

equipment tire and wheel found on the front or rear axle of your vehicle. This spare tire may be used in the tire rotation for your vehicle. If your vehicle has this option, refer to an authorized tire dealer for the recommended tire rotation pattern.

Compact Spare Tire — If Equipped

The compact spare is for temporary emergency use only. You can identify if your vehicle is equipped with a compact spare by looking at the spare tire description on the Tire and Loading Information Placard located on the driver's side door opening or on the sidewall of the tire. Compact spare tire descriptions begin with the letter "T" or "S" preceding the size designation. Example: T145/80D18 103M.

T, S = Temporary Spare Tire

Since this tire has limited tread life, the original equipment tire should be repaired (or replaced) and reinstalled on your vehicle at the first opportunity.

Do not install a wheel cover or attempt to mount a conventional tire on the compact spare wheel, since the wheel is designed specifically for the compact spare tire. Do not install more than one compact spare tire and wheel on the vehicle at any given time.

WARNING!

Compact spares are for temporary emergency use only. With these spares, do not drive more than 50 mph (80 km/h). Temporary use spares have limited tread life. When the tread is worn to the tread wear indicators, the temporary use spare tire needs to be replaced. Be sure to follow the warnings, which apply to your spare. Failure to do so could result in spare tire failure and loss of vehicle control.

Full Size Spare — If Equipped

The full size spare is for temporary emergency use only. This tire may look like the originally equipped tire on the front or rear axle of your vehicle, but it is not. This spare tire may have limited tread life. When the tread is worn to the tread wear indicators, the temporary use full size spare tire needs to be replaced. Since it is not the same as your original equipment tire, replace (or repair) the original equipment tire and reinstall on the vehicle at the first opportunity.

Limited-Use Spare — If Equipped

The limited-use spare tire is for temporary emergency use only. This tire is identified by a label located on the limited-use spare wheel. This label contains the driving limitations for this spare. This tire may look like the original equipped tire on the front or rear axle of your vehicle, but it is not. Installation of this limited-use spare tire affects vehicle handling. Since it is not the same as your original equipment tire, replace (or repair) the original equipment tire and reinstall on the vehicle at the first opportunity.

WARNING!

Limited-use spares are for emergency use only. Installation of this limited-use spare tire affects vehicle handling. With this tire, do not drive more than the speed listed on the limit-use spare wheel. Keep inflated to the cold tire inflation pressures listed on your Tire and Loading Information Placard located on the driver's side B-Pillar or the rear edge of the driver's side door. Replace (or repair) the original equipment tire at the first opportunity and reinstall it on your vehicle. Failure to do so could result in loss of vehicle control.

Tire Spinning

When stuck in mud, sand, snow, or ice conditions, do not spin your vehicle's wheels above 30 mph (48 km/h) or for longer than 30 seconds continuously without stopping.

Refer to "Freeing A Stuck Vehicle" in "What To Do In Emergencies" for further information.

WARNING!

Fast spinning tires can be dangerous. Forces generated by excessive wheel speeds may cause tire damage or failure. A tire could explode and injure someone. Do not spin your vehicle's wheels faster than 30 mph (48 km/h) for more than 30 seconds continuously when you are stuck, and do not let anyone near a spinning wheel, no matter what the speed.

Tread Wear Indicators

Tread wear indicators are in the original equipment tires to help you in determining when your tires should be replaced.

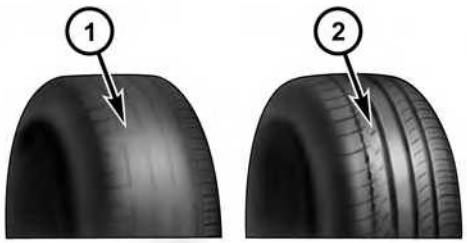

055007576

1 — Worn Tire
2 — New Tire

These indicators are molded into the bottom of the tread grooves. They will appear as bands when the tread depth becomes a 1/16 of an inch (2 mm). When the tread is worn to the tread wear indicators, the tire should be replaced. Refer to "Replacement Tires" in this section for further information.

Life Of Tire

The service life of a tire is dependent upon varying factors including, but not limited to:

- Driving style.
- Tire pressure - Improper cold tire inflation pressures can cause uneven wear patterns to develop across the tire tread. These abnormal wear patterns will reduce tread life, resulting in the need for earlier tire replacement.
- Distance driven.
- Performance tires, tires with a speed rating of V or higher, and summer tires typically have a reduced tread life. Rotation of these tires per the vehicle maintenance schedule is highly recommended.

WARNING!

Tires and the spare tire should be replaced after six years, regardless of the remaining tread. Failure to follow this warning can result in sudden tire failure. You could lose control and have a collision resulting in serious injury or death.

Keep dismounted tires in a cool, dry place with as little exposure to light as possible. Protect tires from contact with oil, grease, and gasoline.

Replacement Tires

The tires on your new vehicle provide a balance of many characteristics. They should be inspected regularly for

wear and correct cold tire inflation pressures. The manufacturer strongly recommends that you use tires equivalent to the originals in size, quality and performance when replacement is needed. Refer to the paragraph on "Tread Wear Indicator." Refer to the Tire and Loading Information placard or the Vehicle Certification Label for the size designation of your tire. The Load Index and Speed Symbol for your tire will be found on the original equipment tire sidewall. See the Tire Sizing Chart example found in the Tire Safety Information section of this manual for more information relating to the Load Index and Speed Symbol of a tire.

It is recommended to replace the two front tires or two rear tires as a pair. Replacing just one tire can seriously affect your vehicle's handling. If you ever replace a wheel, make sure that the wheel's specifications match those of the original wheels.

It is recommended you contact your authorized tire dealer or original equipment dealer with any questions you may have on tire specifications or capability. Failure to use equivalent replacement tires may adversely affect the safety, handling, and ride of your vehicle.

WARNING!

- **Do not use a tire, wheel size or rating other than that specified for your vehicle. Some combinations of unapproved tires and wheels may change suspension dimensions and performance characteristics, resulting in changes to steering, handling, and braking of your vehicle. This can cause unpredictable handling and stress to steering and suspension components. You could lose control and have a collision resulting in serious injury or death. Use only the tire and wheel sizes with load ratings approved for your vehicle.**

(Continued)

WARNING! *(Continued)*

- **Never use a tire with a smaller load index or capacity, other than what was originally equipped on your vehicle. Using a tire with a smaller load index could result in tire overloading and failure. You could lose control and have a collision.**
- **Failure to equip your vehicle with tires having adequate speed capability can result in sudden tire failure and loss of vehicle control.**

CAUTION!

Replacing original tires with tires of a different size may result in false speedometer and odometer readings.

TIRE CHAINS (TRACTION DEVICES)

Use of traction devices require sufficient tire-to-body clearance. Follow these recommendations to guard against damage.

- Traction device must be of proper size for the tire, as recommended by the traction device manufacturer.
- Install on Rear Tires Only.
- Due to limited clearance, use reduced size snow chains or traction devices with a maximum projection of 6 mm beyond the tire profile on either P235/55R18 99V or P225/60R18 99H tires.

WARNING!

Using tires of different size and type (M+S, Snow) between front and rear axles can cause unpredictable handling. You could lose control and have a collision.

CAUTION!

Damage to the vehicle may result if tire chains are used.

TIRE ROTATION RECOMMENDATIONS

Tires on the front and rear axles of vehicles operate at different loads and perform different steering, driving, and braking functions. For these reasons, they wear at unequal rates.

These effects can be reduced by timely rotation of tires. The benefits of rotation are especially worthwhile with aggressive tread designs such as those on all season type tires. Rotation will increase tread life, help to maintain mud, snow and wet traction levels, and contribute to a smooth, quiet ride.

Refer to the "Maintenance Schedule" for the proper maintenance intervals. The reasons for any rapid or unusual wear should be corrected prior to rotation being performed.

The suggested rotation method is the "forward cross" shown in the following diagram. This rotation pattern does not apply to some directional tires that must not be reversed.

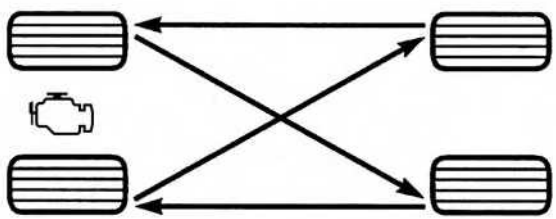

Tire Rotation

TIRE PRESSURE MONITOR SYSTEM (TPMS)

The Tire Pressure Monitor System (TPMS) will warn the driver of a low tire pressure based on the vehicle recommended cold placard pressure.

The tire pressure will vary with temperature by about 1 psi (7 kPa) for every 12°F (6.5°C). This means that when the outside temperature decreases, the tire pressure will decrease. Tire pressure should always be set based on cold inflation tire pressure. This is defined as the tire pressure after the vehicle has not been driven for at least three hours, or driven less than 1 mile (1.6 km) after a three hour period. The cold tire inflation pressure must not exceed the maximum inflation pressure molded into the tire sidewall. Refer to "Tires – General Information" in "Starting and Operating" for information on how to properly inflate the vehicle's tires. The tire pressure will also increase as the vehicle is driven - this is normal and there should be no adjustment for this increased pressure.

The TPMS will warn the driver of a low tire pressure if the tire pressure falls below the low-pressure warning limit for any reason, including low temperature effects and natural pressure loss through the tire.

The TPMS will continue to warn the driver of low tire pressure as long as the condition exists, and will not turn off until the tire pressure is at or above the recommended cold placard pressure. Once the low tire pressure warning (Tire Pressure Monitoring [TPM] Telltale Light) illuminates, you must increase the tire pressure to the recommended cold placard pressure in order for the "TPM Telltale Light" to turn off. The system will automatically update and the "TPM Telltale Light" will turn off once the system receives the updated tire pressures. The vehicle may need to be driven for up to 20 minutes above 15 mph (24 km/h) in order for the TPMS to receive this information.

For example, your vehicle may have a recommended cold (parked for more than three hours) placard pressure of 30 psi (207 kPa). If the ambient temperature is 68°F (20°C) and the measured tire pressure is 27 psi (186 kPa), a temperature drop to 20°F (-7°C) will decrease the tire pressure to approximately 23 psi (158 kPa). This tire pressure is sufficiently low enough to turn ON the "TPM Telltale Light." Driving the vehicle may cause the tire pressure to rise to approximately 27 psi (186 kPa), but the "TPM Telltale Light" will still be ON. In this situation, the "TPM Telltale Light" will turn OFF only after the tires are inflated to the vehicle's recommended cold placard pressure value.

CAUTION!

- **The TPMS has been optimized for the original equipment tires and wheels. TPMS pressures and warning have been established for the tire size equipped on your vehicle. Undesirable system operation or sensor damage may result when using replacement equipment that is not of the same size, type, and/or style. Aftermarket wheels can cause sensor damage. Using aftermarket tire sealants may cause the Tire Pressure Monitoring System (TPMS) sensor to become inoperable. After using an aftermarket tire sealant it is recommended that you take your vehicle to your local dealer to have your sensor function checked.**
- **After inspecting or adjusting the tire pressure, always reinstall the valve stem cap. This will prevent moisture and dirt from entering the valve stem, which could damage the TPM sensor.**

NOTE:

- The TPMS is not intended to replace normal tire care and maintenance or to provide warning of a tire failure or condition.
- The TPMS should not be used as a tire pressure gauge while adjusting your tire pressure.
- Driving on a significantly under-inflated tire causes the tire to overheat and can lead to tire failure. Under-inflation also reduces fuel efficiency and tire tread life, and may affect the vehicle's handling and stopping ability.
- The TPMS is not a substitute for proper tire maintenance, and it is the driver's responsibility to maintain correct tire pressure using an accurate tire pressure gauge, even if under-inflation has not reached the level to trigger illumination of the "TPM Telltale Light."
- Seasonal temperature changes will affect tire pressure, and the TPMS will monitor the actual tire pressure in the tire.

Premium System

The Tire Pressure Monitor System (TPMS) uses wireless technology with wheel rim mounted electronic sensors to monitor tire pressure levels. Sensors mounted to each wheel as part of the valve stem transmit tire pressure readings to the receiver module.

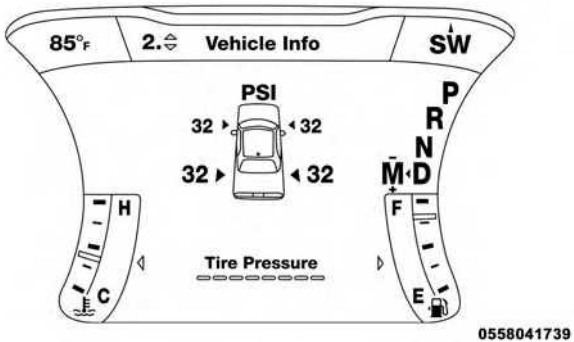

Tire Pressure Monitor Display

NOTE: It is particularly important for you to check the tire pressure in all of the tires on your vehicle monthly and to maintain the proper pressure.

The TPMS consists of the following components:

- Receiver module,
- Four TPM sensors,
- Various TPMS messages, which display in the Driver Information Display (DID), and
- TPM Telltale Light

Tire Pressure Monitoring Low Pressure Warnings

The "TPM Telltale Light" will illuminate in the instrument cluster and a chime will sound when tire pressure is low in one or more of the four active road tires. In addition, the DID will display a "LOW TIRE" message and a graphic showing the pressure values of each tire with the low tire pressure values shown in a different color. An "Inflate Tire to XX" message will also be displayed in the DID display.

Should this occur, you should stop as soon as possible and inflate all of the tires with a low pressure condition (those shown in a different color in the DID graphic) to

the vehicle's recommended cold placard pressure inflation value as shown in the "Inflate Tire to XX" message. Once the system receives the updated tire pressures, the system will automatically update, the graphic display in the DID will return the pressure values shown to their original color, and the "TPM Telltale Light" will turn off. The vehicle may need to be driven for up to 20 minutes above 15 mph (24 km/h) in order for the TPMS to receive this information.

Service TPMS Warning

If a system fault is detected, the "TPM Telltale Light" will flash on and off for 75 seconds and then remain on solid. The system fault will also sound a chime. In addition, the DID will display a "SERVICE TPM SYSTEM" message for a minimum of five seconds and then display dashes (- -) in place of the pressure value to indicate which sensor is not being received.

If the ignition switch is cycled, this sequence will repeat, providing the system fault still exists. If the system fault no longer exists, the "TPM Telltale Light" will no longer flash, and the "SERVICE TPM SYSTEM" message will no longer display, and a pressure value will display in place of the dashes. A system fault can occur due to any of the following:

1. Signal interference due to electronic devices or driving next to facilities emitting the same radio frequencies as the TPM sensors.
2. Installing aftermarket window tinting that contains materials that may block radio wave signals.
3. Accumulation of snow or ice around the wheels or wheel housings.
4. Using tire chains on the vehicle.
5. Using wheels/tires not equipped with TPM sensors.

The DID will also display a "SERVICE TPM SYSTEM" message for a minimum of five seconds when a system fault related to an incorrect sensor location fault is detected. In this case, the "SERVICE TPM SYSTEM" message is then followed with a graphic display with pressure values still shown. This indicates that the pressure values are still being received from the TPM sensors but they may not be located in the correct vehicle position. The system still needs to be serviced as long as the "SERVICE TPM SYSTEM" message is displayed.

Vehicles With Compact Spare

1. The compact spare tire does not have a TPM sensor. Therefore, the TPMS will not monitor the pressure in the compact spare tire.
2. If you install the compact spare tire in place of a road tire that has a pressure below the low-pressure warning limit, upon the next ignition switch cycle, the "TPM Telltale Light" will remain ON and a chime will sound. In addition, the graphic in the DID will still display the low pressure values in a different color and the "Inflate Tire to XX" message.
3. After driving the vehicle for up to 20 minutes above 15 mph (24 km/h), the "TPM Telltale Light" will flash on and off for 75 seconds and then remain on solid. In addition, the DID will display a "SERVICE TPM SYSTEM" message for a minimum of five seconds and then display dashes (- -) in place of the pressure value.
4. For each subsequent ignition switch cycle, a chime will sound, the "TPM Telltale Light" will flash on and off for 75 seconds and then remain on solid, and the DID will display a "SERVICE TPM SYSTEM" message for a minimum of five seconds and then display dashes (- -) in place of the pressure value.
5. Once you repair or replace the original road tire and reinstall it on the vehicle in place of the compact spare, the TPMS will update automatically. In addition, the

"TPM Telltale Light" will turn OFF and the graphic in the DID will display a new pressure value instead of dashes (- -), as long as no tire pressure is below the low-pressure warning limit in any of the four active road tires. The vehicle may need to be driven for up to 20 minutes above 15 mph (24 km/h) in order for the TPMS to receive this information.

General Information

This device complies with Part 15 of the FCC rules and RSS 210 of Industry Canada. Operation is subject to the following conditions:

- This device may not cause harmful interference.
- This device must accept any interference received, including interference that may cause undesired operation.

The TPM sensors are regulated under one of the following licenses:

United States	MRXSSW4
Canada	2546A-SSW4

FUEL REQUIREMENTS

3.6L Engine — If Equipped

This engine is designed to meet all emissions regulations and provide excellent fuel economy and performance when using high-quality unleaded "regular" gasoline having an octane rating of 87. The use of higher octane premium gasoline will not provide any benefit over regular gasoline in these engines.

Light spark knock at low engine speeds is not harmful to your engine. However, continued heavy spark knock at high engine speeds can cause damage and immediate service is required.

Poor quality gasoline can cause problems such as hard starting, stalling, and hesitations. If you experience these symptoms, try another brand of gasoline before considering service for the vehicle. Engine damage resulting from operating with a heavy spark knock may void or not be covered by the New Vehicle Warranty.

5.7L Engine — If Equipped

This engine is designed to meet all emissions regulations and provide satisfactory fuel economy and performance when using high-quality unleaded gasoline having an octane range of 87 to 89. Use of 89 octane for optimum performance is recommended. The use of premium gasoline is not recommended, as it will not provide any benefit over plus gasoline in these engines.

Light spark knock at low engine speeds is not harmful to your engine. However, continued heavy spark knock at high speeds can cause damage and immediate service is required. Engine damage resulting from operating with a heavy spark knock may void or not be covered by the new vehicle warranty.

Poor quality gasoline can cause problems such as hard starting, stalling, and hesitations. If you experience these symptoms, try another brand of gasoline before considering service for the vehicle.

Reformulated Gasoline

Many areas of the country require the use of cleaner burning gasoline referred to as "Reformulated Gasoline." Reformulated gasoline contain oxygenates and are specifically blended to reduce vehicle emissions and improve air quality.

The use of reformulated gasoline is recommended. Properly blended reformulated gasoline will provide improved performance and durability of engine and fuel system components.

Gasoline/Oxygenate Blends

Some fuel suppliers blend unleaded gasoline with oxygenates such as ethanol.

CAUTION!

DO NOT use gasoline containing Methanol or gasoline containing more than 10% Ethanol. Use of these blends may result in starting and drivability problems, damage critical fuel system components, cause emissions to exceed the applicable standard, and/or cause the "Malfunction Indicator Light" to illuminate. Please observe pump labels as they should clearly communicate if a fuel contains greater than 10% ethanol.

Problems that result from using gasoline containing Methanol or gasoline containing more than 10% ethanol are not the responsibility of the manufacturer and may void or not be covered under New Vehicle Limited Warranty.

E-85 Usage In Non-Flex Fuel Vehicles

Non-Flex Fuel Vehicles (FFV) are compatible with gasoline containing up to 10% ethanol (E10). Gasoline with higher ethanol content may void the New Vehicle Limited Warranty.

If a Non-FFV vehicle is inadvertently fueled with E-85 fuel, the engine will have some or all of these symptoms:

- Operate in a lean mode.
- OBD II “Malfunction Indicator Light” on.
- Poor engine performance.
- Poor cold start and cold drivability.
- Increased risk for fuel system component corrosion.

To fix a Non-FFV vehicle inadvertently fueled once with E-85 perform the following:

- Drain the fuel tank (see your authorized dealer).
- Change the engine oil and oil filter.
- Disconnect and reconnect the battery to reset the engine controller memory.

More extensive repairs will be required for prolonged exposure to E-85 fuel.

MMT In Gasoline

Methylcyclopentadienyl Manganese Tricarbonyl (MMT) is a manganese-containing metallic additive that is blended into some gasoline to increase octane. Gasoline blended with MMT provides no performance advantage beyond gasoline of the same octane number without MMT. Gasoline blended with MMT reduces spark plug life and reduces emissions system performance in some vehicles. The manufacturer recommends that gasoline

without MMT be used in your vehicle. The MMT content of gasoline may not be indicated on the gasoline pump, therefore, you should ask your gasoline retailer whether the gasoline contains MMT. MMT is prohibited in Federal and California reformulated gasoline.

Materials Added To Fuel

All gasoline sold in the United States is required to contain effective detergent additives. Use of additional detergents or other additives is not needed under normal conditions and they would result in additional cost. Therefore, you should not have to add anything to the fuel.

Fuel System Cautions

CAUTION!

Follow these guidelines to maintain your vehicle's performance:

- **The use of leaded gasoline is prohibited by Federal law. Using leaded gasoline can impair engine performance and damage the emissions control system.**
- **An out-of-tune engine or certain fuel or ignition malfunctions can cause the catalytic converter to overheat. If you notice a pungent burning odor or some light smoke, your engine may be out of tune or malfunctioning and may require immediate service. Contact your authorized dealer for service assistance.**

(Continued)

CAUTION! *(Continued)*

- **The use of fuel additives, which are now being sold as octane enhancers, is not recommended. Most of these products contain high concentrations of methanol. Fuel system damage or vehicle performance problems resulting from the use of such fuels or additives is not the responsibility of the manufacturer and may void or not be covered under the New Vehicle Limited Warranty.**

NOTE: Intentional tampering with the emissions control system can result in civil penalties being assessed against you.

Carbon Monoxide Warnings

WARNING!

Carbon monoxide (CO) in exhaust gases is deadly. Follow the precautions below to prevent carbon monoxide poisoning:

- **Do not inhale exhaust gases. They contain carbon monoxide, a colorless and odorless gas, which can kill. Never run the engine in a closed area, such as a garage, and never sit in a parked vehicle with the engine running for an extended period. If the vehicle is stopped in an open area with the engine running for more than a short period, adjust the ventilation system to force fresh, outside air into the vehicle.**

(Continued)

WARNING! *(Continued)*

- **Guard against carbon monoxide with proper maintenance. Have the exhaust system inspected every time the vehicle is raised. Have any abnormal conditions repaired promptly. Until repaired, drive with all side windows fully open.**

FLEXIBLE FUEL (3.6L ENGINE ONLY) — IF EQUIPPED

E-85 General Information

The information in this section is for Flexible Fuel vehicles only. These vehicles can be identified by a unique fuel filler door label that states **Ethanol (E-85) or Unleaded Gasoline Only.** This section only covers those subjects that are unique to these vehicles. Please refer to the other sections of this manual for information on features that are common between Flexible Fuel and gasoline-only powered vehicles.

CAUTION!

Only vehicles with the E-85 fuel filler door label can operate on E-85.

Ethanol Fuel (E-85)

E-85 is a mixture of approximately 85% ethanol and 15% unleaded gasoline.

WARNING!

Ethanol vapors are extremely flammable and could cause serious personal injury. Never have any smoking materials lit or products that can cause spark in or near the vehicle when removing the fuel filler tube cap (gas cap) or filling the tank. Do not use E-85 as a cleaning agent and never use it near an open flame.

Fuel Requirements

If your vehicle is E-85 compatible, it will operate on unleaded gasoline with any octane rating, or solely E-85 fuel, or any mixture of these fuels.

For best results, avoid fueling patterns alternating between E-85 and unleaded gasoline.

When switching fuel types:

- Add 5 gallons (19 Liters) or more when refueling.
- Drive the vehicle immediately after refueling for at least 5 miles (8 km).

Observing these precautions will avoid possible hard starting and/or driveability problems during warm up.

NOTE:

- Use seasonally adjusted E-85 fuel (ASTM D5798). With non-seasonally adjusted E-85 fuel, hard starting and rough idle following start up may be experienced even if the above recommendations are followed, especially when the ambient temperature is below 32°F (0°C).
- Some additives used in regular gasoline are not fully compatible with E-85 and may form deposits in your engine. To eliminate driveability issues that may be caused by these deposits, a supplemental gasoline additive, such as MOPAR® Injector Cleanup or Techron may be used.

Selection Of Engine Oil For Flexible Fuel Vehicles (E-85) And Gasoline Vehicles

FFV vehicles operated on E-85 require specially formulated engine oils. These special requirements are included in MOPAR® engine oils, and in equivalent oils meeting Chrysler Specification MS-6395. It is recommended that engine oils that are API Certified and meet the requirements of Material Standard MS-6395 be used. MS-6395 contains additional requirements, developed during extensive fleet testing, to provide additional protection to Chrysler Group LLC engines.

Starting

The characteristics of E-85 fuel make it unsuitable for use when ambient temperatures fall below 0°F (-18°C). In the range of 0°F (-18°C) to 32°F (0°C), an increase in the time it takes for your engine to start may be experienced, and a deterioration in driveability (sags and/or hesitations) until the engine is fully warmed up. These issues may be improved with the use of seasonally adjusted E-85 fuel.

NOTE: Use of the engine block heater (if equipped) may improve engine start time when using E-85 fuel when the ambient temperature is less than 32°F (0°C).

Cruising Range

Because E-85 fuel contains less energy per gallon/liter than gasoline, an increase in fuel consumption will be experienced. The miles per gallon (mpg)/Kilometers per liter and the driving range will decrease by approximately 30%, compared to gasoline operation.

Replacement Parts

All fuel and engine components in your Flexible Fuel Vehicle (FFV) are designed to be compatible with ethanol. Ethanol compatible service components are required.

CAUTION!

Replacing fuel system components with non-ethanol compatible components can damage your vehicle.

Maintenance

CAUTION!

Do not use ethanol mixture greater than 85% in your vehicle. It will cause difficulty in cold starting and may affect drivability.

ADDING FUEL

1. Press the fuel filler door release switch (located in the driver's door map pocket).

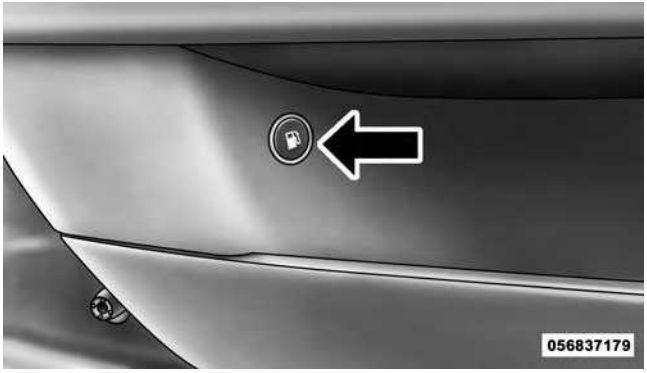

Fuel Filler Door Release Switch

2. Open the fuel filler door.

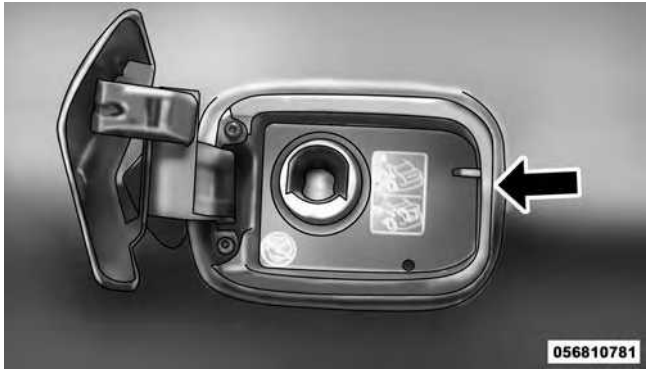

Fuel Filler Door

NOTE: In certain cold conditions, ice may prevent the fuel door from opening. If this occurs, lightly push on the fuel door to break the ice buildup and re-release the fuel door using the inside release button. Do not pry on the door.

3. There is no fuel filler cap. A flapper door inside the pipe seals the system.
4. Insert the fuel nozzle fully into the filler pipe – the nozzle opens and holds the flapper door while refueling.

NOTE: Only the correct size nozzle opens the latches allowing the flapper door to open.

5. Fill the vehicle with fuel – when the fuel nozzle "clicks" or shuts off the fuel tank is full.
6. Maintain nozzle in filler for 5 seconds to allow nozzle to drain.
7. Remove the fuel nozzle and close the fuel door.

NOTE: A funnel is provided (located in the trunk in the spare tire area) to open the flapper door to allow for emergency refueling with a gas can.

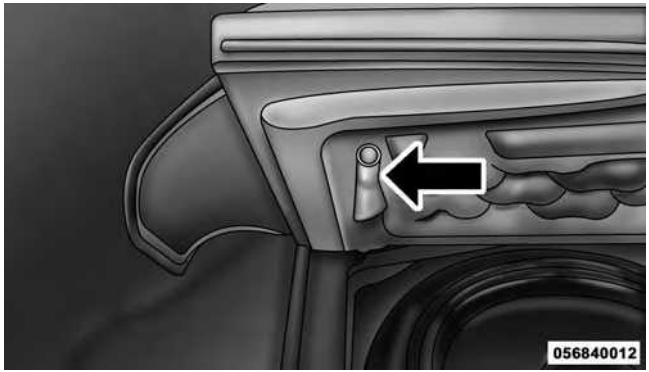

Fuel Funnel

CAUTION!

To avoid fuel spillage and overfilling, do not "top off" the fuel tank after filling.

WARNING!

- **Never have any smoking materials lit in or near the vehicle when the fuel door is open or the tank is being filled.**
- **Never add fuel when the engine is running. This is in violation of most state and federal fire regulations and may cause the "Malfunction Indicator Light" to turn on.**
- **A fire may result if fuel is pumped into a portable container that is inside of a vehicle. You could be burned. Always place fuel containers on the ground while filling.**

Emergency Fuel Filler Door Release

If you are unable to open the fuel filler door, use the fuel filler door emergency release.

1. Open the trunk.
2. Remove the access cover (located on the left side inner trim panel).

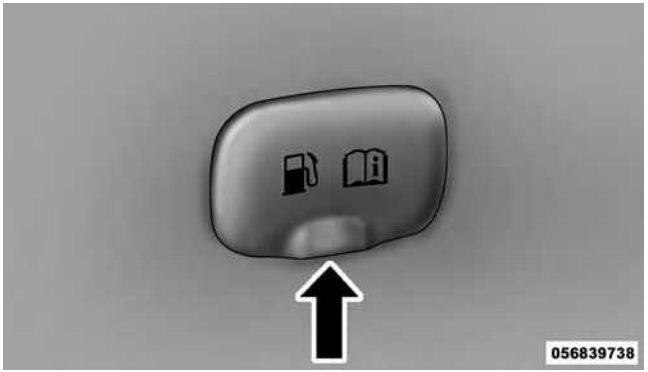

Access Cover

3. Pull the release cable.

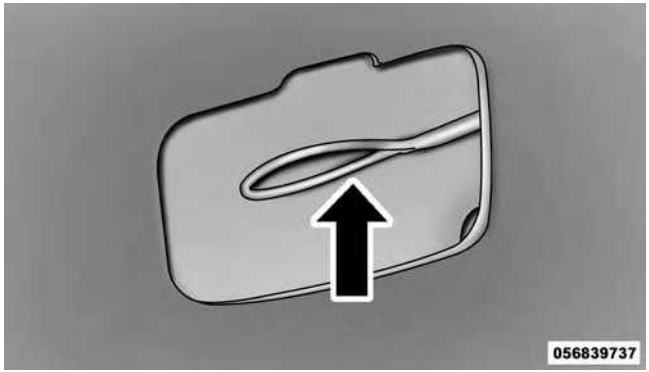

Release Cable

VEHICLE LOADING

The load carrying capacity of your vehicle is shown on the "Vehicle Certification Label". This information should be used for passenger and luggage loading as indicated.

Do not exceed the specified Gross Vehicle Weight Rating (GVWR) or the Gross Axle Weight Rating (GAWR).

Vehicle Certification Label

Your vehicle has a Vehicle Certification Label affixed to the drivers side B-Pillar or the rear of the driver's door.

The label contains the following information:

- Name of manufacturer
- Month and year of manufacture
- Gross Vehicle Weight Rating (GVWR)
- Gross Axle Weight Rating (GAWR) front

- Gross Axle Weight Rating (GAWR) rear
- Vehicle Identification Number (VIN)
- Type of Vehicle
- Month Day and Hour of Manufacture (MDH)

The bar code allows a computer scanner to read the VIN.

Gross Vehicle Weight Rating (GVWR)

The GVWR is the total allowable weight of your vehicle. This includes driver, passengers, and cargo. The total load must be limited so that you do not exceed the GVWR.

Gross Axle Weight Rating (GAWR)

The GAWR is the maximum capacity of the front and rear axles. Distribute the load over the front and rear axles evenly. Make sure that you do not exceed either front or rear GAWR.

WARNING!

Because the front wheels steer the vehicle, it is important that you do not exceed the maximum front or rear GAWR. A dangerous driving condition can result if either rating is exceeded. You could lose control of the vehicle and have a collision.

Overloading

The load carrying components (axle, springs, tires, wheels, etc.) of your vehicle will provide satisfactory service as long as you do not exceed the GVWR and the front and rear GAWR.

The best way to figure out the total weight of your vehicle is to weigh it when it is fully loaded and ready for operation. Weigh it on a commercial scale to ensure that it is not over the GVWR.

Figure out the weight on the front and rear of the vehicle separately. It is important that you distribute the load evenly over the front and rear axles.

Overloading can cause potential safety hazards and shorten useful service life. Heavier axles or suspension components do not necessarily increase the vehicle's GVWR.

Loading

To load your vehicle properly, first figure out its empty weight, axle-by-axle and side-by-side. Store heavier items down low and be sure you distribute their weight as evenly as possible. Stow all loose items securely before driving. If weighing the loaded vehicle shows that you have exceeded either GAWR, but the total load is within the specified GVWR, you must redistribute the weight. Improper weight distribution can have an adverse effect on the way your vehicle steers and handles and the way the brakes operate.

NOTE:

- Refer to the "Vehicle Certification Label" affixed to the rear of the driver's door for your vehicle's GVWR and GAWRs.
- Refer to the "Tire Placard" for your vehicle's proper tire pressure.

TRAILER TOWING

In this section you will find safety tips and information on limits to the type of towing you can reasonably do with your vehicle. Before towing a trailer, carefully review this information to tow your load as efficiently and safely as possible.

To maintain the New Vehicle Limited Warranty coverage, follow the requirements and recommendations in this manual concerning vehicles used for trailer towing.

Common Towing Definitions

The following trailer towing related definitions will assist you in understanding the following information:

Gross Vehicle Weight Rating (GVWR)

The GVWR is the total allowable weight of your vehicle. This includes driver, passengers, cargo and tongue weight. The total load must be limited so that you do not exceed the GVWR. Refer to "Vehicle Loading/Vehicle Certification Label" in "Starting And Operating" for further information.

Gross Trailer Weight (GTW)

The GTW is the weight of the trailer plus the weight of all cargo, consumables and equipment (permanent or temporary) loaded in or on the trailer in its "loaded and ready for operation" condition.

The recommended way to measure GTW is to put your fully loaded trailer on a vehicle scale. The entire weight of the trailer must be supported by the scale.

Gross Combination Weight Rating (GCWR)

The GCWR is the total permissible weight of your vehicle and trailer when weighed in combination.

Gross Axle Weight Rating (GAWR)

The GAWR is the maximum capacity of the front and rear axles. Distribute the load over the front and rear axles evenly. Make sure that you do not exceed either front or rear GAWR. Refer to "Vehicle Loading/Vehicle Certification Label" in "Starting And Operating" for further information.

WARNING!

It is important that you do not exceed the maximum front or rear GAWR. A dangerous driving condition can result if either rating is exceeded. You could lose control of the vehicle and have a collision.

Tongue Weight (TW)

The tongue weight is the downward force exerted on the hitch ball by the trailer. The recommended tongue weight is 10% to 15% of the vehicle's GTW for a conventional hitch. You must consider this as part of the load on your vehicle.

Frontal Area

The frontal area is the maximum height multiplied by the maximum width of the front of a trailer.

Trailer Sway Control

The trailer sway control is a telescoping link that can be installed between the hitch receiver and the trailer tongue that typically provides adjustable friction associated with the telescoping motion to dampen any unwanted trailer swaying motions while traveling.

Weight-Carrying Hitch

A weight-carrying hitch supports the trailer tongue weight, just as if it were luggage located at a hitch ball or some other connecting point of the vehicle. These kinds of hitches are the most popular on the market today and they are commonly used to tow small and medium sized trailers.

Weight-Distributing Hitch

A weight-distributing system works by applying leverage through spring (load) bars. They are typically used for heavier loads to distribute trailer tongue weight to the tow vehicle's front axle and the trailer axle(s). When used in accordance with the manufacturer's directions, it provides for a more level ride, offering more consistent steering and brake control thereby enhancing towing safety. The addition of a friction/hydraulic sway control also dampens sway caused by traffic and crosswinds and contributes positively to tow vehicle and trailer stability. Trailer sway control and a weight distributing (load equalizing) hitch are recommended for heavier Tongue Weights (TW) and may be required depending on vehicle and trailer configuration/loading to comply with Gross Axle Weight Rating (GAWR) requirements.

WARNING!

- **An improperly adjusted Weight Distributing Hitch system may reduce handling, stability, braking performance, and could result in a collision.**
- **Weight Distributing Systems may not be compatible with Surge Brake Couplers. Consult with your hitch and trailer manufacturer or a reputable Recreational Vehicle dealer for additional information.**

Trailer Hitch Classification

The following chart provides the industry standard for the maximum trailer weight a given trailer hitch class can tow and should be used to assist you in selecting the correct trailer hitch for your intended towing condition.

Trailer Hitch Classification Definitions	
Class	**Max. Trailer Hitch Industry Standards**
Class I - Light Duty	2,000 lbs (907 kg)
Class II - Medium Duty	3,500 lbs (1 587 kg)
Class III - Heavy Duty	5,000 lbs (2 268 kg)
Class IV - Extra Heavy Duty	10,000 lbs (4 540 kg)
Refer to the “Trailer Towing Weights (Maximum Trailer Weight Ratings)” chart for the Maximum Gross Trailer Weight (GTW) towable for your given drivetrain.	
All trailer hitches should be professionally installed on your vehicle.	

Trailer Towing Weights (Maximum Trailer Weight Ratings)

The following chart provides the maximum trailer weight ratings towable for your given drivetrain.

Engine/Transmission	Frontal Area	Max. GTW (Gross Trailer Weight)	Max. Tongue Weight (See Note)
3.6L Automatic	22 sq ft (2.04 sq m)	1,000 lbs (454 kg)	100 lbs (45 kg)
5.7L Automatic	32 sq ft (2.97 sq m)	1,000 lbs (454 kg)	100 lbs (45 kg)
Refer to local laws for maximum trailer towing speeds.			

NOTE: The trailer tongue weight must be considered as part of the combined weight of occupants and cargo, and it should never exceed the weight referenced on the "Tire and Loading Information" placard. Refer to "Tire Safety Information" in "Starting and Operating" for further information.

Trailer And Tongue Weight

Always load a trailer with 60% to 65% of the weight in the front of the trailer. This places 10% to 15% of the Gross Trailer Weight (GTW) on the tow hitch of your vehicle. Loads balanced over the wheels or heavier in the rear can cause the trailer to sway **severely** side to side

which will cause loss of control of the vehicle and trailer. Failure to load trailers heavier in front is the cause of many trailer collisions.

Never exceed the maximum tongue weight stamped on your bumper or trailer hitch.

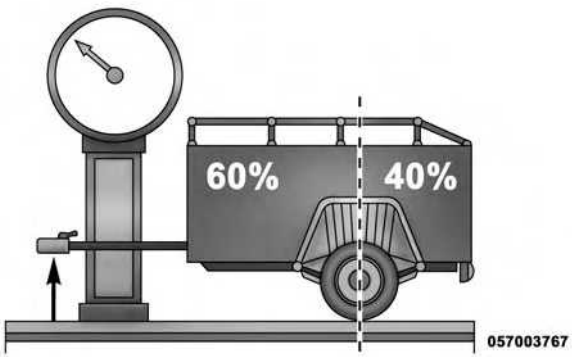

Consider the following items when computing the weight on the rear axle of the vehicle:

- The tongue weight of the trailer.
- The weight of any other type of cargo or equipment put in or on your vehicle.
- The weight of the driver and all passengers.

NOTE: Remember that everything put into or on the trailer adds to the load on your vehicle. Also, additional factory-installed options or dealer-installed options must be considered as part of the total load on your vehicle. Refer to the "Tire and Loading Information" placard for the maximum combined weight of occupants and cargo for your vehicle.

Towing Requirements

To promote proper break-in of your new vehicle drivetrain components the following guidelines are recommended:

WARNING!

Improper towing can lead to an injury collision. Follow these guidelines to make your trailer towing as safe as possible:

- **Make certain that the load is secured in the trailer and it will not shift during travel. When trailering cargo that is not fully secured, dynamic load shifts can occur that may be difficult for the driver to control. You could lose control of your vehicle and have a collision.**

(Continued)

WARNING! ***(Continued)***

- **When hauling cargo or towing a trailer, do not overload your vehicle or trailer. Overloading can cause a loss of control, poor performance, or damage to brakes, axle, engine, transmission, steering, suspension, chassis structure, or tires.**
- **Safety chains must always be used between your vehicle and trailer. Always connect the chains to the frame or hook retainers of the vehicle hitch. Cross the chains under the trailer tongue and allow enough slack for turning corners.**
- **Vehicles with trailers should not be parked on a grade. When parking, apply the parking brake on the tow vehicle. Put the tow vehicle automatic transmission in PARK. Always, block or "chock" the trailer wheels.**
- **GCWR must not be exceeded.**

(Continued)

WARNING! *(Continued)*

- **Total weight must be distributed between the tow vehicle and the trailer such that the following four ratings are not exceeded:**
  1. **Max loading as defined on the "Tire and Loading Information" placard.**
  2. **GTW**
  3. **GAWR**
  4. **Tongue weight rating for the trailer hitch utilized. (This requirement may limit the ability to always achieve the 10% to 15% range of tongue weight as a percentage of total trailer weight.)**

CAUTION!

- **Do not tow a trailer at all during the first 500 miles (805 km) the new vehicle is driven. The engine, axle or other parts could be damaged.**
- **Then, during the first 500 miles (805 km) that a trailer is towed, do not drive over 50 mph (80 km/h) and do not make starts at full throttle. This helps the engine and other parts of the vehicle wear in at the heavier loads.**

Towing Requirements — Tires

- Do not attempt to tow a trailer while using a compact spare tire.
- Proper tire inflation pressures are essential to the safe and satisfactory operation of your vehicle. Refer to "Tires – General Information" in "Starting and Operating" for information on tire pressures and for proper tire inflation procedures.
- Check the trailer tires for proper tire inflation pressures before trailer usage.
- Check for signs of tire wear or visible tire damage before towing a trailer. Refer to "Tires – General Information" in "Starting and Operating" for information on tread wear indicators and for the proper inspection procedure.
- When replacing tires, refer to "Tires – General Information" in "Starting and Operating" for information on replacement tires and for the proper tire replacement procedures. Replacing tires with a higher load carrying capacity will not increase the vehicle's GVWR and GAWR limits.

Towing Requirements — Trailer Brakes

- Do **not** interconnect the hydraulic brake system or vacuum system of your vehicle with that of the trailer. This could cause inadequate braking and possible personal injury.
- An electronically actuated trailer brake controller is required when towing a trailer with electronically actuated brakes. When towing a trailer equipped with a hydraulic surge actuated brake system, an electronic brake controller is not required.

- Trailer brakes are recommended for trailers over 1,000 lbs (454 kg) and required for trailers in excess of 2,000 lbs (907 kg).

WARNING!

- **Do not connect trailer brakes to your vehicle's hydraulic brake lines. It can overload your brake system and cause it to fail. You might not have brakes when you need them and could have a collision.**
- **Towing any trailer will increase your stopping distance. When towing you should allow for additional space between your vehicle and the vehicle in front of you. Failure to do so could result in a collision.**

CAUTION!

If the trailer weighs more than 1,000 lbs (454 kg) loaded, it should have its own brakes and they should be of adequate capacity. Failure to do this could lead to accelerated brake lining wear, higher brake pedal effort, and longer stopping distances.

Towing Requirements — Trailer Lights And Wiring

Whenever you pull a trailer, regardless of the trailer size, stoplights and turn signals on the trailer are required for motoring safety.

The Trailer Tow Package may include a four- and seven-pin wiring harness. Use a factory approved trailer harness and connector.

NOTE: Do not cut or splice wiring into the vehicles wiring harness.

The electrical connections are all complete to the vehicle but you must mate the harness to a trailer connector. Refer to the following illustrations.

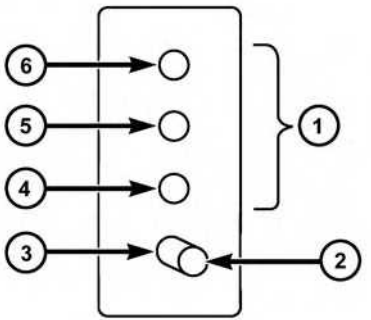

057003766

Four-Pin Connector

1 — Female Pins
2 — Male Pin
3 — Ground
4 — Park
5 — Left Stop/Turn
6 — Right Stop/Turn

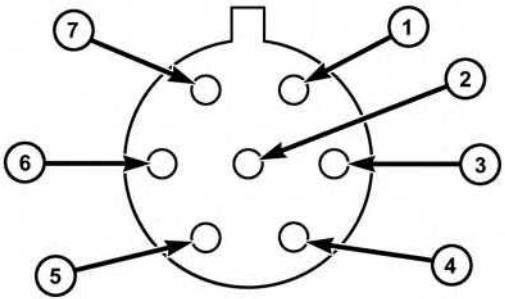

057003765

Seven-Pin Connector

1 — Battery
2 — Backup Lamps
3 — Right Stop/Turn
4 — Electric Brakes
5 — Ground
6 — Left Stop/Turn
7 — Running Lamps

Towing Tips

Before setting out on a trip, practice turning, stopping, and backing up the trailer in an area located away from heavy traffic.

Automatic Transmission

The DRIVE range can be selected when towing. The transmission controls include a drive strategy to avoid frequent shifting when towing. However, if frequent shifting does occur while in DRIVE, you can use the AutoStick shift control to select a lower gear.

NOTE: Using a lower gear while operating the vehicle under heavy loading conditions will improve performance and extend transmission life by reducing excessive shifting and heat buildup. This action will also provide better engine braking.

Electronic Speed Control — If Equipped

- Do not use in hilly terrain or with heavy loads.
- When using the speed control, if you experience speed drops greater than 10 mph (16 km/h), disengage until you can get back to cruising speed.
- Use speed control in flat terrain and with light loads to maximize fuel efficiency.

AutoStick

- When using the AutoStick shift control, select the highest gear that allows for adequate performance and avoids frequent downshifts. For example, choose “5” if the desired speed can be maintained. Choose “4” or “3” if needed to maintain the desired speed.

- To prevent excess heat generation, avoid continuous driving at high RPM. Reduce vehicle speed as necessary to avoid extended driving at high RPM. Return to a higher gear or vehicle speed when grade and road conditions allow.

Cooling System

To reduce potential for engine and transmission overheating, take the following actions:

City Driving

When stopped for short periods of time, shift the transmission into NEUTRAL and increase engine idle speed.

Highway Driving

Reduce speed.

Air Conditioning

Turn off temporarily.

RECREATIONAL TOWING (BEHIND MOTORHOME, ETC.)

Two-Wheel Drive And All-Wheel Drive

Recreational towing (with all four wheels on the ground, or using a tow dolly) is **NOT ALLOWED**. The only acceptable method for towing this vehicle (behind another vehicle) is on a vehicle trailer with all four wheels **OFF** the ground.

CAUTION!

Towing this vehicle in violation of the above requirements can cause severe transmission and/or transfer case damage. Damage from improper towing is not covered under the New Vehicle Limited Warranty.

WHAT TO DO IN EMERGENCIES

CONTENTS

- HAZARD WARNING FLASHERS 495
- IF YOUR ENGINE OVERHEATS 495
- WHEEL AND TIRE TORQUE SPECIFICATIONS 496
  - Torque Specifications 496
- JACKING AND TIRE CHANGING 498
  - Jack Location/Spare Tire Stowage 498
  - Preparations For Jacking 500
  - Jacking And Changing A Tire 501
  - Road Tire Installation. 506
- TIRE SERVICE KIT — IF EQUIPPED 507
  - Tire Service Kit Storage 507
  - Tire Service Kit Components And Operation . .508
  - Tire Service Kit Usage Precautions. 509
  - Sealing A Tire With Tire Service Kit 511
- JUMP-STARTING PROCEDURES 517
  - Preparations For Jump-Start 518
  - Jump-Starting Procedure 519
- FREEING A STUCK VEHICLE 521

■ MANUAL PARK RELEASE — 8 SPEED TRANSMISSION 523

■ TOWING A DISABLED VEHICLE 526

□ All Wheel Drive (AWD) Models 528

□ Rear-Wheel Drive (RWD) Models 529

□ Without The Key Fob. 529

HAZARD WARNING FLASHERS

The Hazard Warning flasher switch is located on the instrument panel, below the radio.

Push the switch to turn on the Hazard Warning flasher. When the switch is activated, all directional turn signals will flash on and off to warn oncoming traffic of an emergency. Push the switch a second time to turn off the Hazard Warning flashers.

This is an emergency warning system and it should not be used when the vehicle is in motion. Use it when your vehicle is disabled and it is creating a safety hazard for other motorists.

When you must leave the vehicle to seek assistance, the Hazard Warning flashers will continue to operate even though the ignition is placed in the OFF position.

NOTE: With extended use the Hazard Warning flashers may wear down your battery.

IF YOUR ENGINE OVERHEATS

In any of the following situations, you can reduce the potential for overheating by taking the appropriate action.

- On the highways — slow down.
- In city traffic — while stopped, place the transmission in NEUTRAL, but do not increase the engine idle speed.

NOTE: There are steps that you can take to slow down an impending overheat condition:

- If your air conditioner (A/C) is on, turn it off. The A/C system adds heat to the engine cooling system and turning the A/C off can help remove this heat.
- You can also turn the temperature control to maximum heat, the mode control to floor and the blower control to high. This allows the heater core to act as a supplement to the radiator and aids in removing heat from the engine cooling system.

CAUTION!

Driving with a hot cooling system could damage your vehicle. If the temperature gauge reads "H," pull over and stop the vehicle. Idle the vehicle with the air conditioner turned off until the pointer drops back into the normal range. If the pointer remains on the "H," turn the engine off immediately and call for service.

WARNING!

You or others can be badly burned by hot engine coolant (antifreeze) or steam from your radiator. If you see or hear steam coming from under the hood, do not open the hood until the radiator has had time to cool. Never try to open a cooling system pressure cap when the radiator or coolant bottle is hot.

WHEEL AND TIRE TORQUE SPECIFICATIONS

Proper lug nut/bolt torque is very important to ensure that the wheel is properly mounted to the vehicle. Any time a wheel has been removed and reinstalled on the vehicle the lug nuts/bolts should be torqued using a properly calibrated torque wrench.

Torque Specifications

Lug Nut/Bolt Torque	**Lug Nut/ Bolt Size	Lug Nut/ Bolt Socket Size
130 Ft-Lbs (176 N·m)	M14 x 1.50	22 mm

**Use only Chrysler recommended lug nuts/bolts and clean or remove any dirt or oil before tightening.

Inspect the wheel mounting surface prior to mounting the tire and remove any corrosion or loose particles.

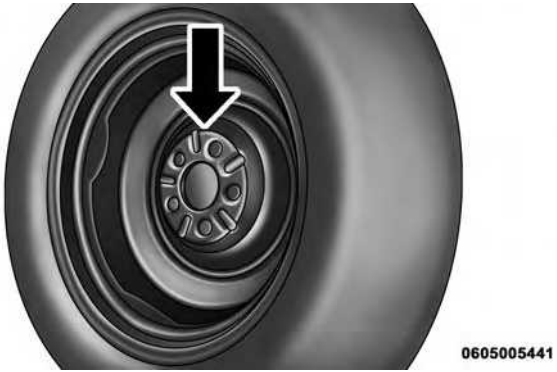

Wheel Mounting Surface

Tighten the lug nuts/bolts in a star pattern until each nut/bolt has been tightened twice.

After 25 miles (40 km) check the lug nut/bolt torque to be sure that all the lug nuts/bolts are properly seated against the wheel.

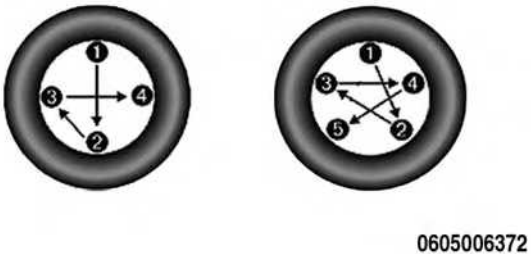

Torque Patterns

WARNING!

To avoid the risk of forcing the vehicle off the jack, do not tighten the lug nuts fully until the vehicle has been lowered. Failure to follow this warning may result in personal injury.

JACKING AND TIRE CHANGING

WARNING!

- **Do not attempt to change a tire on the side of the vehicle close to moving traffic. Pull far enough off the road to avoid the danger of being hit when operating the jack or changing the wheel.**
- **Being under a jacked-up vehicle is dangerous. The vehicle could slip off the jack and fall on you. You could be crushed. Never put any part of your body under a vehicle that is on a jack. If you need to get under a raised vehicle, take it to a service center where it can be raised on a lift.**
- **Never start or run the engine while the vehicle is on a jack.**

(Continued)

WARNING! ***(Continued)***

- **The jack is designed to be used as a tool for changing tires only. The jack should not be used to lift the vehicle for service purposes. The vehicle should be jacked on a firm level surface only. Avoid ice or slippery areas.**

Jack Location/Spare Tire Stowage

The jack and spare tire are both stowed under an access cover in the trunk. Follow these steps to access the jack and spare tire.

NOTE: The spare tire must be removed in order to access the jack.

1. Open the trunk.
2. Lift the access cover using the pull strap.

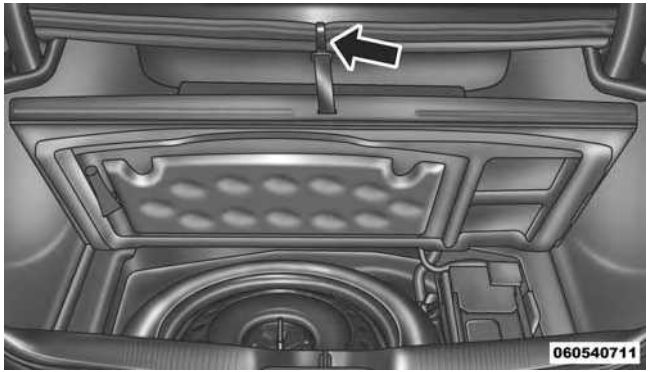

Opening The Access Panel

3. Remove the fastener securing the spare tire.

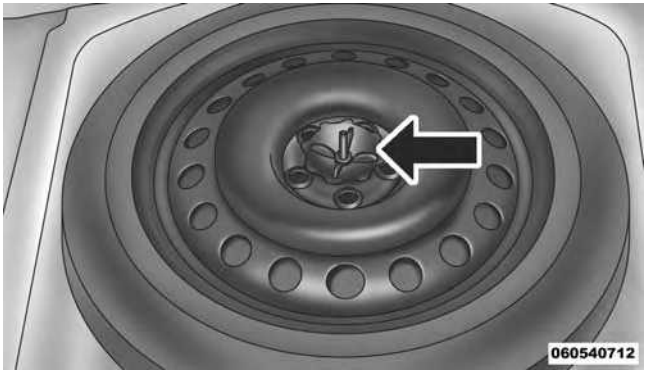

Spare Tire Fastener

4. Remove the spare tire.
5. Remove the fastener securing the jack.

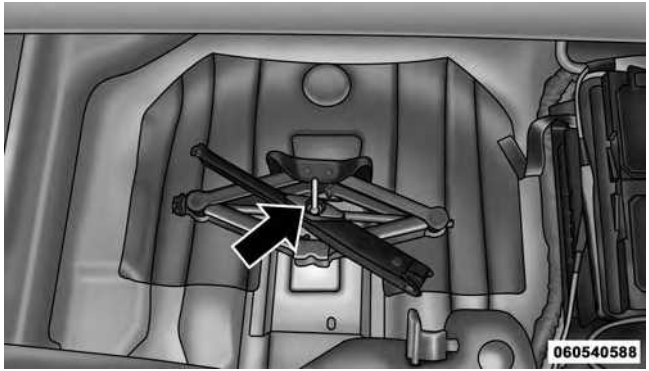

Jack Fastener

6. Remove the jack and lug wrench assembly from under the spare tire. Turn the jack screw to the left to loosen the lug wrench, and remove the wrench from the jack assembly.

WARNING!

A loose tire or jack thrown forward in a collision or hard stop could endanger the occupants of the vehicle. Always stow the jack parts and the spare tire in the places provided. Have the deflated (flat) tire repaired or replaced immediately.

Preparations For Jacking

1. Park the vehicle on a firm, level surface as far from the edge of the roadway as possible. Avoid icy or slippery areas.

WARNING!

Do not attempt to change a tire on the side of the vehicle close to moving traffic, pull far enough off the road to avoid being hit when operating the jack or changing the wheel.

2. Turn on the Hazard Warning flasher.
3. Set the parking brake.
4. Place the shift lever/gear selector into PARK.
5. Turn OFF the ignition.
6. Block both the front and rear of the wheel diagonally opposite of the jacking position. For example, if changing the right front tire, block the left rear wheel.

NOTE: Passengers should not remain in the vehicle when the vehicle is being jacked.

Jacking And Changing A Tire

WARNING!

Carefully follow these tire changing warnings to help prevent personal injury or damage to your vehicle:

- **Always park on a firm, level surface as far from the edge of the roadway as possible before raising the vehicle.**
- **Turn on the Hazard Warning flasher.**
- **Block the wheel diagonally opposite the wheel to be raised.**
- **Set the parking brake firmly and set an automatic transmission in PARK; a manual transmission in REVERSE.**
- **Never start or run the engine with the vehicle on a jack.**

(Continued)

WARNING! *(Continued)*

- **Do not let anyone sit in the vehicle when it is on a jack.**
- **Do not get under the vehicle when it is on a jack. If you need to get under a raised vehicle, take it to a service center where it can be raised on a lift.**
- **Only use the jack in the positions indicated and for lifting this vehicle during a tire change.**
- **If working on or near a roadway, be extremely careful of motor traffic.**

Jack Warning Label

CAUTION!

Do not attempt to raise the vehicle by jacking on locations other than those indicated in the Jacking Instructions for this vehicle.

1. Remove the spare tire, jack, and lug wrench.
2. If equipped with aluminum wheels where the center cap covers the lug nuts, use the lug wrench to pry the center cap off carefully before raising the vehicle.
3. Before raising the vehicle, use the lug wrench to loosen, but not remove, the lug nuts on the wheel with the flat tire. Turn the lug nuts counterclockwise one turn while the wheel is still on the ground.

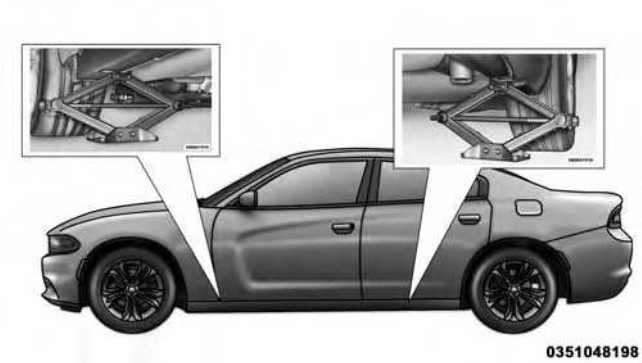

Jacking Locations

4. Place the jack underneath the lift area that is closest to the flat tire. Turn the jack screw clockwise to firmly engage the jack saddle with the lift area of the sill flange.

NOTE: If the vehicle is too low for jack placement, slide the jack on its side and rotate it up into position.

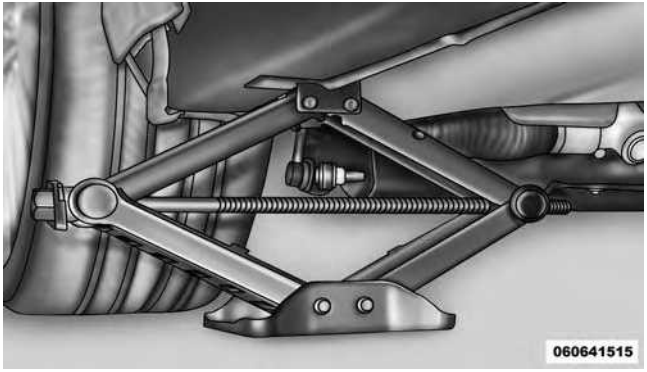

Front Jacking Location

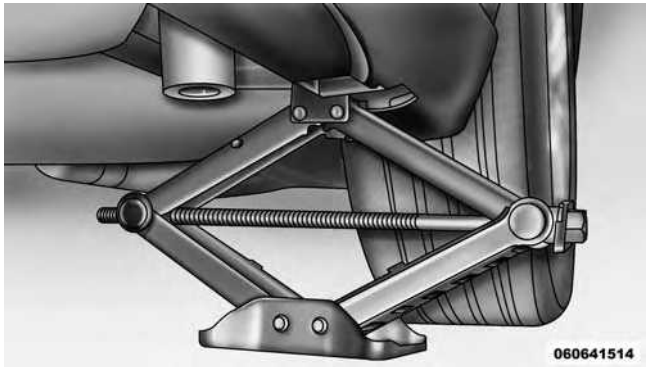

Rear Jacking Location

5. Raise the vehicle just enough to remove the flat tire and install the spare tire.

WARNING!

Raising the vehicle higher than necessary can make the vehicle less stable. It could slip off the jack and hurt someone near it. Raise the vehicle only enough to remove the tire.

6. Remove the lug nuts and tire.
7. Mount the spare tire.

CAUTION!

Be sure to mount the spare tire with the valve stem facing outward. The vehicle could be damaged if the spare tire is mounted incorrectly.

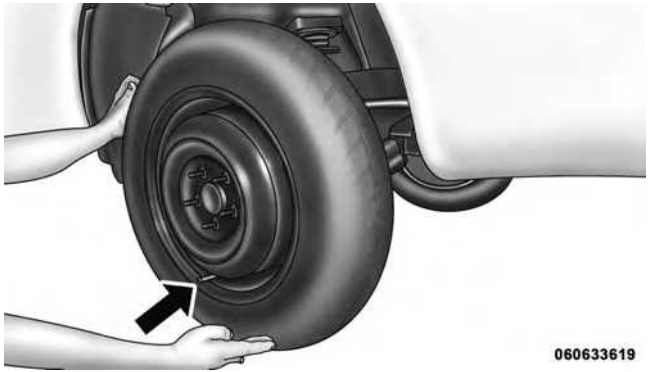

Mounting Spare Tire

NOTE:

- For vehicles so equipped, do not attempt to install a center cap or wheel cover on the compact spare.
- Refer to "Compact Spare Tire" and to "Limited-Use Spare" under "Tires—General Information" in "Starting and Operating" for additional warnings, cautions, and information about the spare tire, its use, and operation.

8. Install the lug nuts with the cone shaped end of the lug nut toward the wheel. Lightly tighten the lug nuts.

WARNING!

To avoid the risk of forcing the vehicle off the jack, do not tighten the lug nuts fully until the vehicle has been lowered. Failure to follow this warning may result in personal injury.

9. Lower the vehicle to the ground by turning the jack handle counterclockwise.
10. Refer to Torque Specifications for proper lug nut torque.
11. Stow the jack, tools and flat tire. Make sure the base of the jack faces the front of the vehicle before tightening down the fastener.

WARNING!

A loose tire or jack thrown forward in a collision or hard stop could endanger the occupants of the vehicle. Always stow the jack parts and the spare tire in the places provided. Have the deflated (flat) tire repaired or replaced immediately.

Road Tire Installation

1. Mount the road tire on the axle.
2. Install the remaining lug nuts with the cone shaped end of the nut toward the wheel. Lightly tighten the lug nuts.

WARNING!

To avoid the risk of forcing the vehicle off the jack, do not tighten the lug nuts fully until the vehicle has been lowered. Failure to follow this warning may result in personal injury.

3. Lower the vehicle to the ground by turning the jack handle counterclockwise.
4. Refer to Torque Table for proper lug nut torque.

5. After 25 miles (40 km) check the lug nut torque with a torque wrench to ensure that all lug nuts are properly seated against the wheel.

TIRE SERVICE KIT — IF EQUIPPED

Small punctures up to ¼″ (6 mm) in the tire tread can be sealed with Tire Service Kit. Foreign objects (e.g., screws or nails) should not be removed from the tire. Tire Service Kit can be used in outside temperatures down to approximately -4°F (-20°C).

This kit will provide a temporary tire seal, allowing you to drive your vehicle up to 100 miles (160 km) with a maximum speed of 55 mph (90 km/h).

Tire Service Kit Storage

The Tire Service Kit is located in the trunk.

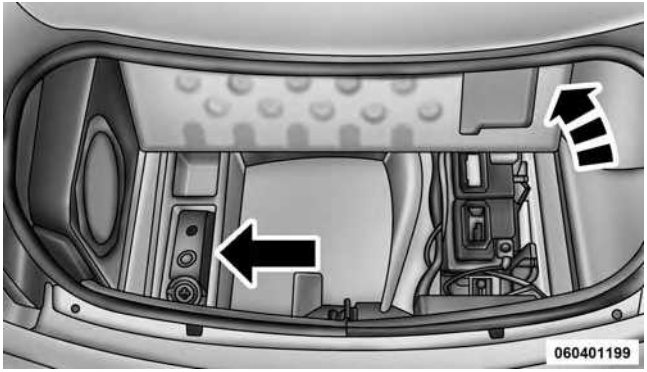

Tire Service Kit Location

Tire Service Kit Components And Operation

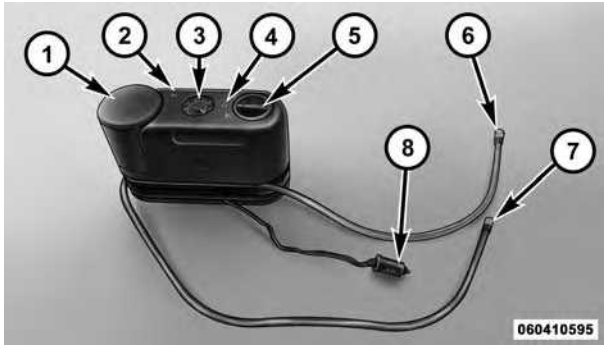

Tire Service Kit Components

1 — Sealant Bottle	5 — Mode Select Knob
2 — Deflation Button	6 — Sealant Hose (Clear)
3 — Pressure Gauge	7 — Air Pump Hose (Black)
4 — Power Button	8 — Power Plug (located on the bottom side of the Tire Service Kit)

Using The Mode Select Knob And Hoses

Your Tire Service Kit is equipped with the following symbols to indicate the air or sealant mode.

Selecting Air Mode

Push in the Mode Select Knob (5) and turn to this position for air pump operation only. Use the Black Air Pump Hose (7) when selecting this mode.

Selecting Sealant Mode

Push in the Mode Select Knob (5) and turn to this position to inject the Tire Service Kit Sealant and to inflate the tire. Use the Sealant Hose (clear hose) (6) when selecting this mode.

Using The Power Button

Push and release the Power Button (4) once to turn On the Tire Service Kit. Push and release the Power Button (4) again to turn Off the Tire Service Kit.

Using The Deflation Button

Push the Deflation Button (2) to reduce the air pressure in the tire if it becomes over-inflated.

Tire Service Kit Usage Precautions

- Replace the Tire Service Kit Sealant Bottle (1) and Sealant Hose (6) prior to the expiration date (printed at the lower right hand corner on the bottle label) to assure optimum operation of the system. Refer to "Sealing a Tire with Tire Service Kit" section (F) "Sealant Bottle and Hose Replacement".

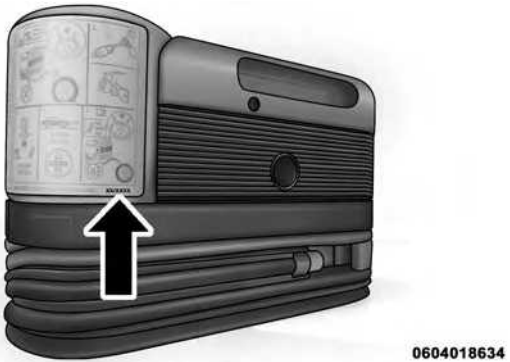

Tire Service Kit Expiration Date Location

- The Sealant Bottle (1) and Sealant Hose (6) are a one tire application use and need to be replaced after each use. Always replace these components immediately at your original equipment vehicle dealer.
- When the Tire Service Kit sealant is in a liquid form, clean water, and a damp cloth will remove the material

from the vehicle or tire and wheel components. Once the sealant dries, it can easily be peeled off and properly discarded.

- For optimum performance, make sure the valve stem on the wheel is free of debris before connecting the Tire Service Kit.
- You can use the Tire Service Kit air pump to inflate bicycle tires. The kit also comes with two needles, located in the Accessory Storage Compartment (on the bottom of the air pump) for inflating sport balls, rafts, or similar inflatable items. However, use only the Air Pump Hose (7) and make sure the Mode Select Knob (5) is in the Air Mode when inflating such items to avoid injecting sealant into them. The Tire Service Kit Sealant is only intended to seal punctures less than ¼" (6 mm) diameter in the tread of your vehicle.
- Do not lift or carry the Tire Service Kit by the hoses.

WARNING!

- **Do not attempt to seal a tire on the side of the vehicle closest to traffic. Pull far enough off the road to avoid the danger of being hit when using the Tire Service Kit.**
- **Do not use Tire Service Kit or drive the vehicle under the following circumstances:**
  - **If the puncture in the tire tread is approximately 1/4" (6 mm) or larger.**
  - **If the tire has any sidewall damage.**
  - **If the tire has any damage from driving with extremely low tire pressure.**
  - **If the tire has any damage from driving on a flat tire.**
  - **If the wheel has any damage.**
  - **If you are unsure of the condition of the tire or the wheel.**

(Continued)

WARNING! ***(Continued)***

- **Keep Tire Service Kit away from open flames or heat source.**
- **A loose Tire Service Kit thrown forward in a collision or hard stop could endanger the occupants of the vehicle. Always stow the Tire Service Kit in the place provided. Failure to follow these warnings can result in injuries that are serious or fatal to you, your passengers, and others around you.**
- **Take care not to allow the contents of Tire Service Kit to come in contact with hair, eyes, or clothing. Tire Service Kit is harmful if inhaled, swallowed, or absorbed through the skin. It causes skin, eye, and respiratory irritation. Flush immediately with plenty of water if there is any contact with eyes or skin. Change clothing as soon as possible, if there is any contact with clothing.**

(Continued)

WARNING! ***(Continued)***

- **Tire Service Kit Sealant solution contains latex. In case of an allergic reaction or rash, consult a physician immediately. Keep Tire Service Kit out of reach of children. If swallowed, rinse mouth immediately with plenty of water and drink plenty of water. Do not induce vomiting! Consult a physician immediately.**

Sealing A Tire With Tire Service Kit

(A) Whenever You Stop To Use Tire Service Kit:

1. Pull over to a safe location and turn on the vehicle's Hazard Warning flashers.
2. Verify that the valve stem (on the wheel with the deflated tire) is in a position that is near to the ground. This will allow the Tire Service Kit Hoses (6) and (7) to reach the valve stem and keep the Tire Service Kit flat

on the ground. This will provide the best positioning of the kit when injecting the sealant into the deflated tire and running the air pump. Move the vehicle as necessary to place the valve stem in this position before proceeding.

3. Place the transmission in PARK (auto transmission) or in Gear (manual transmission) and place the ignition in the OFF position.
4. Set the parking brake.

(B) Setting Up To Use Tire Service Kit:

1. Push in the Mode Select Knob (5) and turn to the Sealant Mode position.
2. Uncoil the Sealant Hose (6) and then remove the cap from the fitting at the end of the hose.
3. Place the Tire Service Kit flat on the ground next to the deflated tire.
4. Remove the cap from the valve stem and then screw the fitting at the end of the Sealant Hose (6) onto the valve stem.
5. Uncoil the Power Plug (8) and insert the plug into the vehicle's 12 Volt power outlet.

NOTE: Do not remove foreign objects (e.g., screws or nails) from the tire.

(C) Injecting Tire Service Kit Sealant Into The Deflated Tire:

- Always start the engine before turning ON the Tire Service Kit.

NOTE: Manual transmission vehicles must have the parking brake engaged and the shift lever in NEUTRAL.

- After pushing the Power Button (4), the sealant (white fluid) will flow from the Sealant Bottle (1) through the Sealant Hose (6) and into the tire.

NOTE: Sealant may leak out through the puncture in the tire.

If the sealant (white fluid) does not flow within 0 – 10 seconds through the Sealant Hose (6):

1. Push the Power Button (4) to turn Off the Tire Service Kit. Disconnect the Sealant Hose (6) from the valve stem. Make sure the valve stem is free of debris. Reconnect the Sealant Hose (6) to the valve stem. Check that the Mode Select Knob (5) is in the Sealant Mode position and not Air Mode. Push the Power Button (4) to turn On the Tire Service Kit.
2. Connect the Power Plug (8) to a different 12 Volt power outlet in your vehicle or another vehicle, if available. Make sure the engine is running before turning ON the Tire Service Kit.
3. The Sealant Bottle (1) may be empty due to previous use. Call for assistance.

NOTE: If the Mode Select Knob (5) is on Air Mode and the pump is operating, air will dispense from the Air Pump Hose (7) only, not the Sealant Hose (6).

If the sealant (white fluid) does flow through the Sealant Hose (6):

1. Continue to operate the pump until sealant is no longer flowing through hose (typically takes 30 - 70 seconds). As the sealant flows through the Sealant Hose (6), the Pressure Gauge (3) can read as high as 70 psi (4.8 Bar). The Pressure Gauge (3) will decrease quickly from approximately 70 psi (4.8 Bar) to the actual tire pressure when the Sealant Bottle (1) is empty.
2. The pump will start to inject air into the tire immediately after the Sealant Bottle (1) is empty. Continue to operate the pump and inflate the tire to the pressure indicated on the tire pressure label on the driver-side latch pillar (recommended pressure). Check the tire pressure by looking at the Pressure Gauge (3).

If the tire does not inflate to at least 26 psi (1.8 Bar) pressure within 15 minutes:

- The tire is too badly damaged. Do not attempt to drive the vehicle further. Call for assistance.

NOTE: If the tire becomes over-inflated, push the Deflation Button to reduce the tire pressure to the recommended inflation pressure before continuing.

If the tire inflates to the recommended pressure or is at least 26 psi (1.8 Bar) pressure within 15 minutes:

1. Push the Power Button (4) to turn off the Tire Service Kit.
2. Remove the Speed Limit sticker from the top of the Sealant Bottle (1) and place the sticker on the instrument panel.
3. Immediately disconnect the Sealant Hose (6) from the valve stem, reinstall the cap on the fitting at the end of the hose, and place the Tire Service Kit in the vehicle storage location. Quickly proceed to (D) "Drive Vehicle."

CAUTION!

- **The metal end fitting from Power Plug (8) may get hot after use, so it should be handled carefully.**
- **Failure to reinstall the cap on the fitting at the end of the Sealant Hose (6) can result in sealant contacting your skin, clothing, and the vehicle's interior. It can also result in sealant contacting internal Tire Service Kit components which may cause permanent damage to the kit.**

(D) Drive Vehicle:

Immediately after injecting sealant and inflating the tire, drive the vehicle 5 miles (8 km) or 10 minutes to ensure distribution of the Tire Service Kit Sealant within the tire. Do not exceed 55 mph (90 km/h).

WARNING!

Tire Service Kit is not a permanent flat tire repair. Have the tire inspected and repaired or replaced after using Tire Service Kit. Do not exceed 55 mph (90 km/h) until the tire is repaired or replaced. Failure to follow this warning can result in injuries that are serious or fatal to you, your passengers, and others around you.

(E) After Driving:

Pull over to a safe location. Refer to "Whenever You Stop to Use Tire Service Kit" before continuing.

1. Push in the Mode Select Knob (5) and turn to the Air Mode position.
2. Uncoil the power plug and insert the plug into the vehicle's 12 Volt power outlet.
3. Uncoil the Air Pump Hose (7) (black in color) and screw the fitting at the end of hose (7) onto the valve stem.
4. Check the pressure in the tire by reading the Pressure Gauge (3).

If tire pressure is less than 19 psi (1.3 Bar):

The tire is too badly damaged. Do not attempt to drive the vehicle further. Call for assistance.

If the tire pressure is 19 psi (1.3 Bar) or higher:

1. Push the Power Button (4) to turn on Tire Service Kit and inflate the tire to the pressure indicated on the tire and loading information label on the driver-side door opening.

NOTE: If the tire becomes over-inflated, push the Deflation Button to reduce the tire pressure to the recommended inflation pressure before continuing.

2. Disconnect the Tire Service Kit from the valve stem, reinstall the cap on the valve stem and unplug from 12 Volt outlet.
3. Place the Tire Service Kit in its proper storage area in the vehicle.
4. Have the tire inspected and repaired or replaced at the earliest opportunity at an authorized dealer or tire service center.
5. Remove the Speed Limit sticker from the instrument panel after the tire has been repaired.
6. Replace the Sealant Bottle (1) and Sealant Hose (6) assembly at your authorized dealer as soon as possible. Refer to (F) "Sealant Bottle and Hose Replacement".

NOTE: When having the tire serviced, advise the authorized dealer or service center that the tire has been sealed using the Tire Service Kit.

(F) Sealant Bottle And Hose Replacement:

1. Uncoil the Sealant Hose (6) (clear in color).
2. Locate the round Sealant Bottle release button in the recessed area under the sealant bottle.
3. Push the Sealant Bottle release button. The Sealant Bottle (1) will pop up. Remove the bottle and dispose of it accordingly.
4. Clean any remaining sealant from the Tire Service Kit housing.
5. Position the new Sealant Bottle (1) in the housing so that the Sealant Hose (6) aligns with the hose slot in the front of the housing. Push the bottle into the housing. An audible click will be heard indicating the bottle is locked into place.

6. Verify that the cap is installed on the fitting at the end of the Sealant Hose (6) and return the hose to its storage area (located on the bottom of the air pump).
7. Return the Tire Service Kit to its storage location in the vehicle.

JUMP-STARTING PROCEDURES

If your vehicle has a discharged battery it can be jump-started using a set of jumper cables and a battery in another vehicle or by using a portable battery booster pack. Jump-starting can be dangerous if done improperly so please follow the procedures in this section carefully.

NOTE: When using a portable battery booster pack follow the manufacturer's operating instructions and precautions.

CAUTION!

Do not use a portable battery booster pack or any other booster source with a system voltage greater than 12 Volts or damage to the battery, starter motor, alternator or electrical system may occur.

WARNING!

Do not attempt jump-starting if the battery is frozen. It could rupture or explode and cause personal injury.

Preparations For Jump-Start

The battery is stored under an access cover in the trunk. Remote battery posts are located on the right side of the engine compartment for jump-starting.

NOTE: The remote battery posts are viewed by standing on the right side of the vehicle looking over the fender.

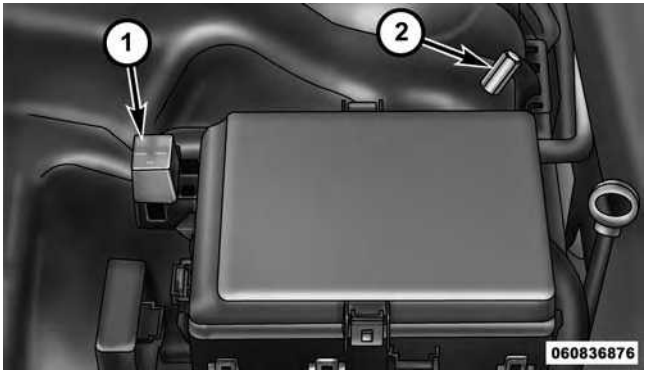

Remote Battery Post Locations

1 — Remote Positive **(+)** Post
2 — Remote Negative **(-)** Post

WARNING!

- **Take care to avoid the radiator cooling fan whenever the hood is raised. It can start anytime the ignition switch is ON. You can be injured by moving fan blades.**
- **Remove any metal jewelry such as watch bands or bracelets that might make an inadvertent electrical contact. You could be seriously injured.**
- **Batteries contain sulfuric acid that can burn your skin or eyes and generate hydrogen gas which is flammable and explosive. Keep open flames or sparks away from the battery.**

1. Set the parking brake, shift the automatic transmission into PARK and place the ignition in the OFF position.
2. Turn off the heater, radio, and all unnecessary electrical accessories.
3. If using another vehicle to jump-start the battery, park the vehicle within the jumper cables reach, set the parking brake and make sure the ignition is OFF.

WARNING!

Do not allow vehicles to touch each other as this could establish a ground connection and personal injury could result.

Jump-Starting Procedure

WARNING!

Failure to follow this jump-starting procedure could result in personal injury or property damage due to battery explosion.

CAUTION!

Failure to follow these procedures could result in damage to the charging system of the booster vehicle or the discharged vehicle.

Connecting The Jumper Cables

1. Connect the positive **(+)** end of the jumper cable to the remote positive **(+)** post of the vehicle with the discharged battery.
2. Connect the opposite end of the positive **(+)** jumper cable to the positive **(+)** post of the booster battery.
3. Connect the negative **(-)** end of the jumper cable to the negative **(-)** post of the booster battery.
4. Connect the opposite end of the negative **(-)** jumper cable to the remote negative **(-)** post of the vehicle with the discharged battery.

WARNING!

Do not connect the jumper cable to the negative (-) post of the discharged battery. The resulting electrical spark could cause the battery to explode and could result in personal injury. Only use the specific ground point, do not use any other exposed metal parts.

5. Start the engine in the vehicle that has the booster battery, let the engine idle a few minutes, and then start the engine in the vehicle with the discharged battery.

6. Once the engine is started, remove the jumper cables in the reverse sequence:

Disconnecting The Jumper Cables

1. Disconnect the negative **(-)** end of the jumper cable from the remote negative **(-)** post of the vehicle with the discharged battery.
2. Disconnect the opposite end of the negative **(-)** jumper cable from the negative **(-)** post of the booster battery.
3. Disconnect the positive **(+)** end of the jumper cable from the positive **(+)** post of the booster battery.
4. Disconnect the opposite end of the positive **(+)** jumper cable from the remote positive **(+)** post of the vehicle with the discharged battery.

If frequent jump-starting is required to start your vehicle you should have the battery and charging system inspected at your authorized dealer.

CAUTION!

Accessories plugged into the vehicle power outlets draw power from the vehicle's battery, even when not in use (i.e., cellular phones, etc.). Eventually, if plugged in long enough without engine operation, the vehicle's battery will discharge sufficiently to degrade battery life and/or prevent the engine from starting.

FREEING A STUCK VEHICLE

If your vehicle becomes stuck in mud, sand, or snow, it can often be moved using a rocking motion. Turn the steering wheel right and left to clear the area around the front wheels. Push and hold the lock button on the shift lever. Then shift back and forth between DRIVE and REVERSE while gently pushing the accelerator. Use the

least amount of accelerator pedal pressure that will maintain the rocking motion, without spinning the wheels or racing the engine.

NOTE: Shifts between DRIVE and REVERSE can only be achieved at wheel speeds of 5 mph (8 km/h) or less. Whenever the transmission remains in NEUTRAL for more than 2 seconds, you must push the brake pedal to engage DRIVE or REVERSE.

CAUTION!

Racing the engine or spinning the wheels may lead to transmission overheating and failure. Allow the engine to idle with the transmission in NEUTRAL for at least one minute after every five rocking-motion cycles. This will minimize overheating and reduce the risk of transmission failure during prolonged efforts to free a stuck vehicle.

NOTE: Push the "ESC Off" switch, to place the Electronic Stability Control (ESC) system in "Partial Off" mode, before rocking the vehicle. Refer to "Electronic Brake Control" in "Starting And Operating" for further information. Once the vehicle has been freed, push the "ESC Off" switch again to restore "ESC On" mode.

CAUTION!

- **When "rocking" a stuck vehicle by shifting between DRIVE and REVERSE, do not spin the wheels faster than 15 mph (24 km/h), or drivetrain damage may result.**
- **Revving the engine or spinning the wheels too fast may lead to transmission overheating and failure. It can also damage the tires. Do not spin the wheels above 30 mph (48 km/h) while in gear (no transmission shifting occurring).**

WARNING!

Fast spinning tires can be dangerous. Forces generated by excessive wheel speeds may cause damage, or even failure, of the axle and tires. A tire could explode and injure someone. Do not spin your vehicle's wheels faster than 30 mph (48 km/h) or for longer than 30 seconds continuously without stopping when you are stuck and do not let anyone near a spinning wheel, no matter what the speed.

MANUAL PARK RELEASE — 8 SPEED TRANSMISSION

WARNING!

Always secure your vehicle by fully applying the parking brake, before activating the Manual Park

(Continued)

WARNING! ***(Continued)***

Release. Activating the Manual Park Release will allow your vehicle to roll away if it is not secured by the parking brake or by proper connection to a tow vehicle. Activating the Manual Park Release on an unsecured vehicle could lead to serious injury or death for those in or around the vehicle.

In order to push or tow the vehicle in cases where the transmission will not shift out of PARK (such as a dead battery), a Manual Park Release is available.

Follow these steps to use the Manual Park Release:

1. Firmly apply the parking brake.
2. Remove the console storage bin.

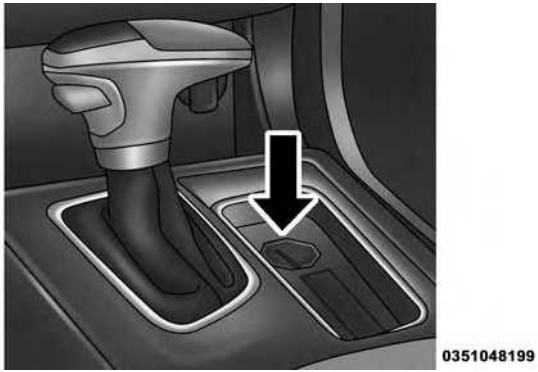

Console Storage Bin

3. Remove plastic cover under the bin by using the slot provided to access the Manual Park Release lever.
4. Using a small screwdriver or similar tool, fish the tether strap up through the opening in the console base.
5. Insert the screwdriver into the slot in the center of the lever, and disengage the lever locking tab by pushing it to the right.

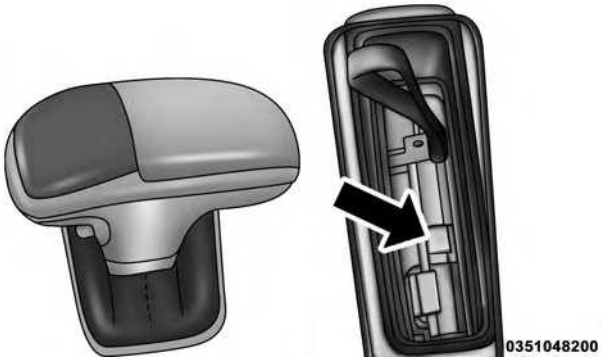

Locking Tab

6. While holding the locking tab in the disengaged position, pull the tether strap to rotate the lever up and rearward, until it locks in place in the vertical position. The vehicle is now out of PARK and can be towed. Release the parking brake only when the vehicle is securely connected to a tow vehicle.

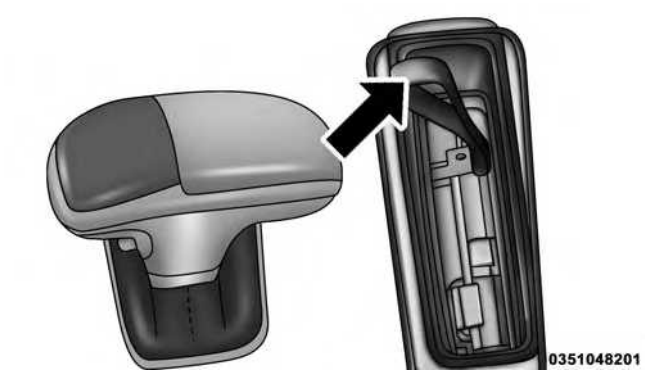

Tether Strap

To Reset The Manual Park Release:

1. Push the latch (at the base of the lever, on the rear side) rearward (away from the lever) to unlatch the lever.
2. Rotate the Manual Park Release lever forward and down, to its original position, until the locking tab snaps into place to secure the lever.
3. Pull up gently on the tether strap to confirm that the lever is locked in its stowed position.
4. Tuck the tether strap into the base of the console. Reinstall the console storage bin.

TOWING A DISABLED VEHICLE

This section describes procedures for towing a disabled vehicle using a commercial towing service.

Towing Condition	Wheels OFF The Ground	RWD MODELS	AWD MODELS
Flat Tow	NONE	**If transmission is operable:** • Transmission in **NEUTRAL** • 30 mph (48 km/h) **max** speed • 30 miles (48 km) **max** distance	**NOT ALLOWED**

Towing Condition	Wheels OFF The Ground	RWD MODELS	AWD MODELS
Wheel Lift or Dolly Tow	Front	**NOT RECOMMENDED (but, if used, same limitations as above)**	**NOT ALLOWED**
	Rear	NOT RECOMMENDED	NOT RECOMMENDED, but, if used: • Ignition in ON/RUN position • Transmission in **NEUTRAL (NOT in Park)**
Flatbed	**ALL**	**BEST METHOD**	**BEST METHOD**

Proper towing or lifting equipment is required to prevent damage to your vehicle. Use only tow bars and other equipment designed for this purpose, following equipment manufacturer's instructions. Use of safety chains is mandatory. Attach a tow bar or other towing device to main structural members of the vehicle, not to bumpers or associated brackets. State and local laws regarding vehicles under tow must be observed.

If you must use the accessories (wipers, defrosters, etc.) while being towed, the ignition must be in the ON/RUN position, not the ACC position.

If the key fob is unavailable, or the vehicle's battery is discharged, refer to "Manual Park Release" in this section for instructions on shifting the transmission out of PARK for towing.

CAUTION!

- **DO NOT use sling-type equipment when towing. Vehicle damage may occur.**
- **When securing the vehicle to a flatbed truck, do not attach to front or rear suspension components. Damage to your vehicle may result from improper towing.**
- **The manufacturer does not recommend towing this vehicle using a tow dolly. Vehicle damage may occur.**

All Wheel Drive (AWD) Models

The manufacturer recommends towing your vehicle with all four wheels OFF the ground using a flatbed.

If the transmission and drivetrain are operable, AWD models can also be towed with the ignition in the ON/RUN position, the transmission in NEUTRAL (not in PARK!), and the rear wheels OFF the ground with no limitation on speed or distance. Since the ignition MUST be in the ON/RUN position to tow in this manner, AWD vehicles must be towed with ALL FOUR wheels OFF the ground (e.g. on a flatbed truck) if the Key Fob is unavailable.

CAUTION!

- **Towing this vehicle using any other method can cause severe transmission and/or transfer case damage.**
- **Damage from improper towing is not covered under the New Vehicle Limited Warranty.**

Rear-Wheel Drive (RWD) Models

The manufacturer recommends towing your vehicle with all four wheels OFF the ground using a flatbed.

If flatbed equipment is not available, and the transmission is operable, this vehicle may be towed (with rear wheels on the ground) under the following conditions:

- The transmission must be in NEUTRAL.
- The towing speed must not exceed 30 mph (48 km/h).
- The towing distance must not exceed 30 miles (48 km).

If the transmission is not operable, or the vehicle must be towed faster than 30 mph (48 km/h) or farther than 30 miles (48 km), then the only acceptable method of towing is with a flatbed truck.

CAUTION!

Towing this vehicle in violation of the above requirements can cause severe transmission damage. Damage from improper towing is not covered under the New Vehicle Limited Warranty.

Without The Key Fob

Special care must be taken when the vehicle is towed with the ignition in the LOCK/OFF position. The only approved method of towing without the Key Fob is with a flatbed truck. Proper towing equipment is necessary to prevent damage to the vehicle.

MAINTAINING YOUR VEHICLE

CONTENTS

- ENGINE COMPARTMENT — 3.6L 533
- ENGINE COMPARTMENT — 5.7L 534
- ONBOARD DIAGNOSTIC SYSTEM — OBD II . .535
- EMISSIONS INSPECTION AND MAINTENANCE PROGRAMS 535
- REPLACEMENT PARTS 537
- DEALER SERVICE 537
- MAINTENANCE PROCEDURES 538
  - Engine Oil 538
  - Engine Oil Filter 542
  - Engine Air Cleaner Filter 543
  - Maintenance-Free Battery 543
  - Air Conditioner Maintenance 545
  - A/C Air Filter 546
  - Body Lubrication 548
  - Windshield Wiper Blades 549
  - Adding Washer Fluid 549
  - Exhaust System 550
  - Cooling System 552
  - Brake System 559

- Automatic Transmission 561
- All Wheel Drive (AWD) — If Equipped 563
- Rear Axle 564
- Appearance Care And Protection From Corrosion 564

■ FUSES 571
- Front Power Distribution Center (Fuses) 572
- Rear Power Distribution Center (Fuses) 576

■ VEHICLE STORAGE 584

■ REPLACEMENT BULBS 585

■ BULB REPLACEMENT 587
- Front Low/High Beam Headlamp And Park/Turn Lamp — Models With Halogen Headlamps . . .587
- Front Low/High Beam Headlamp And Park/Turn Lamp — Models With High Intensity Discharge Headlamps (HID) 588
- Front/Rear Side Marker Lamp 588
- Front Fog Lamp 588
- Backup Lamps. 588
- Center High Mounted Stop Lamp (CHMSL). . .589
- License Lamp 589

■ FLUID CAPACITIES 589

■ FLUIDS, LUBRICANTS AND GENUINE PARTS 591
- Engine 591
- Chassis 593

ENGINE COMPARTMENT — 3.6L

1 — Remote Jump Start (Positive Battery Post)
2 — Power Distribution Center (Fuses)
3 — Remote Jump Start (Negative Battery Post)
4 — Engine Oil Dipstick
5 — Brake Fluid Reservoir Access Cover
6 — Engine Coolant Reservoir
7 — Air Cleaner Filter
8 — Engine Oil Fill
9 — Washer Fluid Reservoir

ENGINE COMPARTMENT — 5.7L

1 — Remote Jump Start (Positive Battery Post)
2 — Power Distribution Center (Fuses)
3 — Remote Jump Start (Negative Battery Post)
4 — Brake Fluid Reservoir Access Cover
5 — Engine Coolant Reservoir
6 — Air Cleaner Filter
7 — Engine Oil Fill
8 — Engine Oil Dipstick
9 — Washer Fluid Reservoir

ONBOARD DIAGNOSTIC SYSTEM — OBD II

Your vehicle is equipped with a sophisticated onboard diagnostic system called OBD II. This system monitors the performance of the emissions, engine, and automatic transmission control systems. When these systems are operating properly, your vehicle will provide excellent performance and fuel economy, as well as engine emissions well within current government regulations.

If any of these systems require service, the OBD II system will turn on the "Malfunction Indicator Light (MIL)." It will also store diagnostic codes and other information to assist your service technician in making repairs. Although your vehicle will usually be drivable and not need towing, see your authorized dealer for service as soon as possible.

CAUTION!

- **Prolonged driving with the MIL on could cause further damage to the emissions control system. It could also affect fuel economy and driveability. The vehicle must be serviced before any emissions tests can be performed.**
- **If the MIL is flashing while the engine is running, severe catalytic converter damage and power loss will soon occur. Immediate service is required.**

EMISSIONS INSPECTION AND MAINTENANCE PROGRAMS

In some localities, it may be a legal requirement to pass an inspection of your vehicle's emissions control system. Failure to pass could prevent vehicle registration.

For states that require an Inspection and Maintenance (I/M), this check verifies the "Malfunction

Indicator Light (MIL)" is functioning and is not on when the engine is running, and that the OBD II system is ready for testing.

Normally, the OBD II system will be ready. The OBD II system may **not** be ready if your vehicle was recently serviced, recently had a dead battery or a battery replacement. If the OBD II system should be determined not ready for the I/M test, your vehicle may fail the test.

Your vehicle has a simple ignition actuated test, which you can use prior to going to the test station. To check if your vehicle's OBD II system is ready, you must do the following:

1. Cycle the ignition switch to the ON position, but do not crank or start the engine.

NOTE: If you crank or start the engine, you will have to start this test over.

2. As soon as you cycle the ignition switch to the ON position, you will see the Malfunction Indicator Light (MIL) symbol come on as part of a normal bulb check.

3. Approximately 15 seconds later, one of two things will happen:

- The MIL will flash for about 10 seconds and then return to being fully illuminated until you turn OFF the ignition or start the engine. This means that your vehicle's OBD II system is **not ready** and you should **not** proceed to the I/M station.

- The MIL will not flash at all and will remain fully illuminated until you place the ignition in the off position or start the engine. This means that your vehicle's OBD II system is **ready** and you can proceed to the I/M station.

If your OBD II system is **not ready,** you should see your authorized dealer or repair facility. If your vehicle was

recently serviced or had a battery failure or replacement, you may need to do nothing more than drive your vehicle as you normally would in order for your OBD II system to update. A recheck with the above test routine may then indicate that the system is **now ready**.

Regardless of whether your vehicle's OBD II system is ready or not, if the MIL is illuminated during normal vehicle operation you should have your vehicle serviced before going to the I/M station. The I/M station can fail your vehicle because the MIL is on with the engine running.

REPLACEMENT PARTS

Use of genuine MOPAR® parts for normal/scheduled maintenance and repairs is highly recommended to ensure the designed performance. Damage or failures caused by the use of non-MOPAR® parts for maintenance and repairs will not be covered by the New Vehicle Limited Warranty.

DEALER SERVICE

Your authorized dealer has the qualified service personnel, special tools, and equipment to perform all service operations in an expert manner. Service Manuals are available which include detailed service information for your vehicle. Refer to these Service Manuals before attempting any procedure yourself.

NOTE: Intentional tampering with emissions control systems may void your warranty and could result in civil penalties being assessed against you.

WARNING!

You can be badly injured working on or around a motor vehicle. Only do service work for which you have the knowledge and the proper equipment. If you have any doubt about your ability to perform a service job, take your vehicle to a competent mechanic.

MAINTENANCE PROCEDURES

The pages that follow contain the **required** maintenance services determined by the engineers who designed your vehicle.

Besides those maintenance items specified in the fixed "Maintenance Schedule", there are other components which may require servicing or replacement in the future.

CAUTION!

- **Failure to properly maintain your vehicle or perform repairs and service when necessary could result in more costly repairs, damage to other components or negatively impact vehicle performance. Immediately have potential malfunctions examined by an authorized dealer or qualified repair center.**

(Continued)

CAUTION! *(Continued)*

- **Your vehicle has been built with improved fluids that protect the performance and durability of your vehicle and also allow extended maintenance intervals. Do not use chemical flushes in these components as the chemicals can damage your engine, transmission, power steering or air conditioning. Such damage is not covered by the New Vehicle Limited Warranty. If a flush is needed because of component malfunction, use only the specified fluid for the flushing procedure.**

Engine Oil

Checking Oil Level — 3.6L Engine

To assure proper engine lubrication, the engine oil must be maintained at the correct level. Check the oil level at

regular intervals, such as every fuel stop. The best time to check the engine oil level is about five minutes after a fully warmed engine is shut off.

Checking the oil while the vehicle is on level ground will improve the accuracy of the oil level readings. Maintain the oil level between the MIN and MAX markings on the dipstick. Adding 1.0 qt (1.0 L) of oil when the reading is at the MIN mark will result in a MAX reading on these engines.

CAUTION!

Overfilling or underfilling will cause oil aeration or loss of oil pressure. This could damage your engine.

Checking Oil Level — 5.7L Engine

To assure proper engine lubrication, the engine oil must be maintained at the correct level. Check the oil level at regular intervals, such as every fuel stop. The best time to check the engine oil level is about five minutes after a fully warmed engine is shut off.

Checking the oil while the vehicle is on level ground will improve the accuracy of the oil level readings. Maintain the oil level in the “SAFE” range. Adding 1.0 qt (1.0 L) of oil when the reading is at the bottom of the “SAFE” range will result in an oil level at the top of the “SAFE” range on these engines.

CAUTION!

Overfilling or underfilling will cause oil aeration or loss of oil pressure. This could damage your engine.

Change Engine Oil

The oil change indicator system will remind you that it is time to take your vehicle in for scheduled maintenance. Refer to the "Maintenance Schedule" for further information.

NOTE: Under no circumstances should oil change intervals exceed 10,000 miles (16,000 km) or twelve months, whichever occurs first.

Engine Oil Selection

For best performance and maximum protection under all types of operating conditions, the manufacturer only recommends engine oils that are API Certified and meet the requirements of Chrysler Material Standard MS-6395.

American Petroleum Institute (API) Engine Oil Identification Symbol

This symbol means that the oil has been certified by the American Petroleum Institute (API). The manufacturer only recommends API Certified engine oils.

CAUTION!

Do not use chemical flushes in your engine oil as the chemicals can damage your engine. Such damage is not covered by the New Vehicle Limited Warranty.

Engine Oil Viscosity — 3.6L Engine

MOPAR® SAE 5W-20 engine oil approved to Chrysler Material Standard MS-6395 such as Pennzoil®, Shell Helix® or equivalent is recommended for all operating temperatures. This engine oil improves low temperature starting and vehicle fuel economy.

The engine oil filler cap also shows the recommended engine oil viscosity for your engine. For information on engine oil filler cap location, refer to the "Engine Compartment" illustration in this section.

NOTE: MOPAR® SAE 5W-30 engine oil approved to Chrysler Material Standard MS-6395 such as Pennzoil®, Shell Helix® or equivalent may be used when SAE 5W-20 engine oil meeting MS-6395 is not available.

Engine Oil Viscosity — 5.7L Engine

MOPAR® SAE 5W-20 engine oil or equivalent such as Pennzoil® or Shell Helix® is recommended for all operating temperatures. This engine oil improves low temperature starting and vehicle fuel economy.

The engine oil filler cap also shows the recommended engine oil viscosity for your engine. For information on engine oil filler cap location, refer to "Engine Compartment" in "Maintaining Your Vehicle" for further information.

NOTE: Vehicles equipped with a 5.7L engine must use SAE 5W-20 oil. Failure to do so may result in improper operation of the Fuel Saver Technology. Refer to "Fuel Saver Technology – If Equipped" in "Starting and Operating" for further information.

Lubricants that do not have both, the engine oil certification mark and the correct SAE viscosity grade number should not be used.

Synthetic Engine Oils

You may use synthetic engine oils provided the recommended oil quality requirements are met, and the recommended maintenance intervals for oil and filter changes are followed.

Materials Added To Engine Oil

The manufacturer strongly recommends against the addition of any additives (other than leak detection dyes) to the engine oil. Engine oil is an engineered product and its performance may be impaired by supplemental additives.

Disposing Of Used Engine Oil And Oil Filters

Care should be taken in disposing of used engine oil and oil filters from your vehicle. Used oil and oil filters, indiscriminately discarded, can present a problem to the environment. Contact your authorized dealer, service station or governmental agency for advice on how and where used oil and oil filters can be safely discarded in your area.

Engine Oil Filter

The engine oil filter should be replaced with a new filter at every engine oil change.

Engine Oil Filter Selection

This manufacturer's engines have a full-flow type oil filter. Use a filter of this type for replacement. The quality of replacement filters varies considerably. Only high quality filters should be used to assure most efficient service. MOPAR® engine oil filters are a high quality oil filter and are recommended.

Engine Air Cleaner Filter

Refer to the "Maintenance Schedule" for the proper maintenance intervals.

WARNING!

The air induction system (air cleaner, hoses, etc.) can provide a measure of protection in the case of engine backfire. Do not remove the air induction system (air cleaner, hoses, etc.) unless such removal is necessary for repair or maintenance. Make sure that no one is near the engine compartment before starting the vehicle with the air induction system (air cleaner, hoses, etc.) removed. Failure to do so can result in serious personal injury.

Engine Air Cleaner Filter Selection

The quality of replacement engine air cleaner filters varies considerably. Only high quality filters should be used to assure most efficient service. MOPAR® engine air cleaner filters are a high quality filter and are recommended.

Maintenance-Free Battery

Your vehicle is equipped with a maintenance-free battery. You will never have to add water, nor is periodic maintenance required.

NOTE: The battery is stored under an access cover in the trunk. Remote battery terminals are located in the engine compartment for jump starting. Refer to "Jump-Starting Procedures" in "What To Do In Emergencies" for further information.

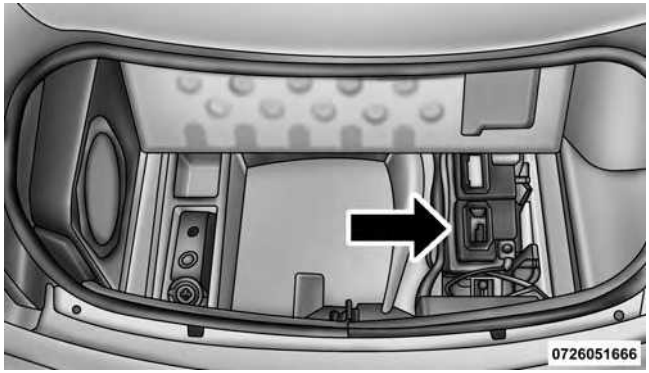

Battery Location

WARNING!

- **Battery fluid is a corrosive acid solution and can burn or even blind you. Do not allow battery fluid to contact your eyes, skin, or clothing. Do not lean over a battery when attaching clamps. If acid splashes in eyes or on skin, flush the area immediately with large amounts of water.**
- **Battery gas is flammable and explosive. Keep flame or sparks away from the battery. Do not use a booster battery or any other booster source with an output greater than 12 Volts. Do not allow cable clamps to touch each other.**
- **Battery posts, terminals, and related accessories contain lead and lead compounds. Wash hands after handling.**
- **The battery in this vehicle has a vent hose that should not be disconnected and should only be replaced with a battery of the same type (vented).**

CAUTION!

- **It is essential when replacing the cables on the battery that the positive cable is attached to the positive post and the negative cable is attached to the negative post. Battery posts are marked positive (+) and negative (-) and are identified on the battery case. Cable clamps should be tight on the terminal posts and free of corrosion.**
- **If a "fast charger" is used while the battery is in the vehicle, disconnect both vehicle battery cables before connecting the charger to the battery. Do not use a "fast charger" to provide starting voltage.**

Air Conditioner Maintenance

For best possible performance, your air conditioner should be checked and serviced by an authorized dealer at the start of each warm season. This service should include cleaning of the condenser fins and a performance test. Drive belt tension should also be checked at this time.

WARNING!

- **Use only refrigerants and compressor lubricants approved by the manufacturer for your air conditioning system. Some unapproved refrigerants are flammable and can explode, injuring you. Other unapproved refrigerants or lubricants can cause the system to fail, requiring costly repairs. Refer to Warranty Information Book, located on the DVD, for further warranty information.**
- **The air conditioning system contains refrigerant under high pressure. To avoid risk of personal injury or damage to the system, adding refrigerant or any repair requiring lines to be disconnected should be done by an experienced technician.**

CAUTION!

Do not use chemical flushes in your air conditioning system as the chemicals can damage your air conditioning components. Such damage is not covered by the New Vehicle Limited Warranty.

Refrigerant Recovery And Recycling R134a — If Equipped

R-134a Air Conditioning Refrigerant is a hydrofluorocarbon (HFC) that is endorsed by the Environmental Protection Agency and is an ozone-saving product. However, the manufacturer recommends that air conditioning service be performed by authorized dealer or other service facilities using recovery and recycling equipment.

NOTE: Use only manufacturer approved A/C system PAG compressor oil and refrigerants.

Refrigerant Recovery And Recycling HFO 1234yf — If Equipped

HFO 1234yf Air Conditioning Refrigerant is a hydrofluorocarbon (HFC) that is endorsed by the Environmental Protection Agency and is an ozone-saving product with a low GWP (Global Warming Potential). However, the manufacturer recommends that air conditioning service be performed by authorized dealer or other service facilities using recovery and recycling equipment.

NOTE: Use only manufacturer approved A/C system PAG compressor oil and refrigerants.

A/C Air Filter

The filter is located in the fresh air inlet under the hood, behind a removable panel in the cowl on the passenger side of the vehicle, next to the windshield wipers. When installing a new filter, ensure its proper orientation.

1. Remove the access door in the cowl screen by pressing the retaining clips.

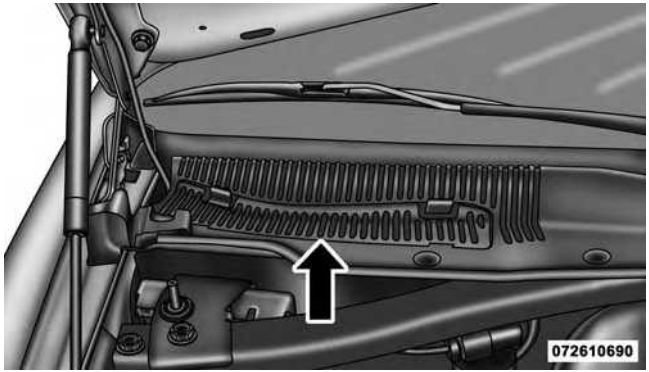

Access Door

2. Unsnap both ends and lift the filter access cover.

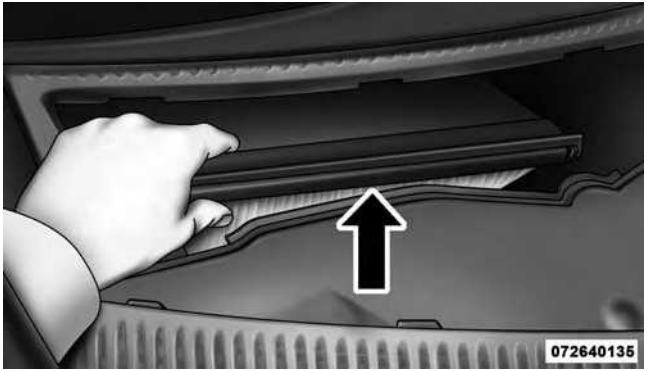

Filter Access Cover

3. Remove the used filter.
4. Install the new filter with arrows pointing in the direction of airflow, which is toward the rear of the vehicle (text and arrows on the filter will indicate this).

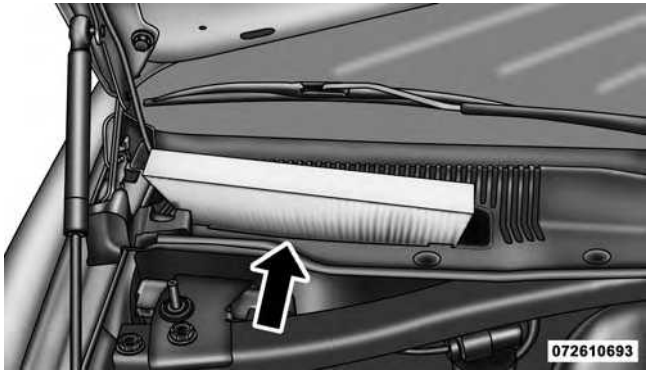

A/C Air Filter

5. Close the filter access cover.

Refer to the "Maintenance Schedule" for the proper maintenance intervals.

Body Lubrication

Locks and all body pivot points, including such items as seat tracks, door hinge pivot points and rollers, liftgate, tailgate, decklid, sliding doors and hood hinges, should be lubricated periodically with a lithium based grease, such as MOPAR® Spray White Lube to assure quiet, easy operation and to protect against rust and wear. Prior to the application of any lubricant, the parts concerned should be wiped clean to remove dust and grit; after lubricating excess oil and grease should be removed. Particular attention should also be given to hood latching components to ensure proper function. When performing other underhood services, the hood latch, release mechanism and safety catch should be cleaned and lubricated.

The external lock cylinders should be lubricated twice a year, preferably in the Fall and Spring. Apply a small amount of a high quality lubricant, such as MOPAR® Lock Cylinder Lubricant directly into the lock cylinder.

Windshield Wiper Blades

Clean the rubber edges of the wiper blades and the windshield periodically with a sponge or soft cloth and a mild nonabrasive cleaner. This will remove accumulations of salt or road film.

Operation of the wipers on dry glass for long periods may cause deterioration of the wiper blades. Always use washer fluid when using the wipers to remove salt or dirt from a dry windshield.

Avoid using the wiper blades to remove frost or ice from the windshield. Keep the blade rubber out of contact with petroleum products such as engine oil, gasoline, etc.

NOTE: Life expectancy of wiper blades varies depending on geographical area and frequency of use. Poor performance of blades may be present with chattering, marks, water lines or wet spots. If any of these conditions are present, clean the wiper blades or replace as necessary.

Adding Washer Fluid

The windshield washer fluid reservoir is located in the front of the engine compartment. Be sure to check the fluid level at regular intervals. Fill the reservoir with windshield washer solvent (not radiator antifreeze) and operate the system for a few seconds to flush out the residual water.

When refilling the washer fluid reservoir, apply some washer fluid to a cloth or towel and wipe the wiper blades clean. This will help blade performance.

To prevent freeze-up of your windshield washer system in cold weather, select a solution or mixture that meets or exceeds the temperature range of your climate. This rating information can be found on most washer fluid containers.

The fluid reservoir will hold nearly 1 gal (4 L) of washer fluid when the message "Low Washer Fluid" appears in the Driver Information Display (DID).

WARNING!

Commercially available windshield washer solvents are flammable. They could ignite and burn you. Care must be exercised when filling or working around the washer solution.

Exhaust System

The best protection against carbon monoxide entry into the vehicle body is a properly maintained engine exhaust system.

If you notice a change in the sound of the exhaust system; or if the exhaust fumes can be detected inside the vehicle; or when the underside or rear of the vehicle is damaged; have an authorized technician inspect the complete exhaust system and adjacent body areas for broken, damaged, deteriorated, or mispositioned parts. Open seams or loose connections could permit exhaust fumes to seep into the passenger compartment. In addition, have the exhaust system inspected each time the vehicle is raised for lubrication or oil change. Replace as required.

WARNING!

- **Exhaust gases can injure or kill. They contain carbon monoxide (CO), which is colorless and odorless. Breathing it can make you unconscious and can eventually poison you. To avoid breathing CO, refer to "Safety Tips/Exhaust Gas" in "Things To Know Before Starting Your Vehicle" for further information.**

(Continued)

WARNING! *(Continued)*

- **A hot exhaust system can start a fire if you park over materials that can burn. Such materials might be grass or leaves coming into contact with your exhaust system. Do not park or operate your vehicle in areas where your exhaust system can contact anything that can burn.**

CAUTION!

- **The catalytic converter requires the use of unleaded fuel only. Leaded gasoline will destroy the effectiveness of the catalyst as an emissions control device and may seriously reduce engine performance and cause serious damage to the engine.**

(Continued)

CAUTION! *(Continued)*

- **Damage to the catalytic converter can result if your vehicle is not kept in proper operating condition. In the event of engine malfunction, particularly involving engine misfire or other apparent loss of performance, have your vehicle serviced promptly. Continued operation of your vehicle with a severe malfunction could cause the converter to overheat, resulting in possible damage to the converter and vehicle.**

Under normal operating conditions, the catalytic converter will not require maintenance. However, it is important to keep the engine properly tuned to assure proper catalyst operation and prevent possible catalyst damage.

NOTE: Intentional tampering with emissions control systems can result in civil penalties being assessed against you.

In unusual situations involving grossly malfunctioning engine operation, a scorching odor may suggest severe and abnormal catalyst overheating. If this occurs, stop the vehicle, turn off the engine and allow it to cool. Service, including a tune-up to manufacturer's specifications, should be obtained immediately.

To minimize the possibility of catalytic converter damage:

- Do not shut off the engine or interrupt the ignition, when the transmission is in gear and the vehicle is in motion.
- Do not try to start the engine by pushing or towing the vehicle.
- Do not idle the engine with any spark plug wires disconnected or removed, such as when diagnostic testing, or for prolonged periods during very rough idle or malfunctioning operating conditions.

Cooling System

WARNING!

- **When working near the radiator cooling fan, disconnect the fan motor lead or cycle the ignition switch to the LOCK position. The fan is temperature controlled and can start at any time the ignition switch is in the ON position.**
- **You or others can be badly burned by hot engine coolant (antifreeze) or steam from your radiator. If you see or hear steam coming from under the hood, do not open the hood until the radiator has had time to cool. Never try to open a cooling system pressure cap when the radiator is hot.**

Coolant Checks

Check engine coolant (antifreeze) protection every 12 months (before the onset of freezing weather, where applicable). If the engine coolant (antifreeze) is dirty, the system should be drained, flushed, and refilled with fresh OAT coolant (conforming to MS.90032) only according to Chrysler Service Manual procedure or by an authorized dealer. Check the front of the radiator for any accumulation of bugs, leaves, etc. If dirty, clean by gently spraying water from a garden hose vertically down the face of the condenser.

Check the coolant recovery bottle tubing for brittle rubber, cracking, tears, cuts, and tightness of the connection at the bottle and radiator. Inspect the entire system for leaks.

With the engine at normal operating temperature (but not running), check the cooling system pressure cap for proper vacuum sealing by draining a small amount of engine coolant (antifreeze) from the radiator drain cock. If the cap is sealing properly, the engine coolant (antifreeze) will begin to drain from the coolant recovery bottle. DO NOT REMOVE THE COOLANT PRESSURE CAP WHEN THE COOLING SYSTEM IS HOT.

Cooling System — Drain, Flush And Refill

NOTE: Some vehicles require special tools to add coolant properly. Failure to fill these systems properly could lead to severe internal engine damage. If any coolant is needed to be added to the system please contact your local authorized dealer.

If the engine coolant (antifreeze) is dirty or contains visible sediment, have an authorized dealer clean and flush with OAT coolant (antifreeze) (conforming to MS.90032).

Refer to the "Maintenance Schedule" for the proper maintenance intervals.

Selection Of Coolant

Refer to "Fluids, Lubricants, and Genuine Parts" in "Maintaining Your Vehicle" for further information.

CAUTION!

- **Mixing of engine coolant (antifreeze) other than specified Organic Additive Technology (OAT) engine coolant (antifreeze), may result in engine damage and may decrease corrosion protection. Organic Additive Technology (OAT) engine coolant is different and should not be mixed with Hybrid Organic Additive Technology (HOAT) engine coolant (antifreeze) or any "globally compatible" coolant (antifreeze). If a non-OAT engine coolant (antifreeze) is introduced into the cooling system in an emergency, the cooling system will need to be drained, flushed, and refilled with fresh OAT coolant (conforming to MS.90032), by an authorized dealer as soon as possible.**

(Continued)

CAUTION! ***(Continued)***

- **Do not use water alone or alcohol-based engine coolant (antifreeze) products. Do not use additional rust inhibitors or antirust products, as they may not be compatible with the radiator engine coolant and may plug the radiator.**
- **This vehicle has not been designed for use with propylene glycol-based engine coolant (antifreeze). Use of propylene glycol-based engine coolant (antifreeze) is not recommended.**

Adding Coolant

Your vehicle has been built with an improved engine coolant (OAT coolant conforming to MS.90032) that allows extended maintenance intervals. This engine coolant (antifreeze) can be used up to ten years or 150,000 miles (240,000 km) before replacement. To prevent reducing this extended maintenance period, it is important that you use the same engine coolant (OAT coolant conforming to MS.90032) throughout the life of your vehicle.

Please review these recommendations for using Organic Additive Technology (OAT) engine coolant (antifreeze) that meets the requirements of Chrysler Material Standard MS.90032. When adding engine coolant (antifreeze):

- We recommend using MOPAR® Antifreeze/Coolant 10 Year/150,000 Mile Formula OAT (Organic Additive Technology) that meets the requirements of Chrysler Material Standard MS.90032.
- Mix a minimum solution of 50% OAT engine coolant that meets the requirements of Chrysler Material Standard MS.90032 and distilled water. Use higher concentrations (not to exceed 70%) if temperatures below –34° F (–37° C) are anticipated.
- Use only high purity water such as distilled or deionized water when mixing the water/engine coolant

(antifreeze) solution. The use of lower quality water will reduce the amount of corrosion protection in the engine cooling system.

Please note that it is the owner's responsibility to maintain the proper level of protection against freezing according to the temperatures occurring in the area where the vehicle is operated.

NOTE:

- Some vehicles require special tools to add coolant properly. Failure to fill these systems properly could lead to severe internal engine damage. If any coolant is needed to be added to the system please contact your local authorized dealer.
- Mixing engine coolant (antifreeze) types is not recommended and can result in cooling system damage. If HOAT and OAT coolant are mixed in an emergency, have a authorized dealer drain, flush, and refill with OAT coolant (conforming to MS.90032) as soon as possible.

Cooling System Pressure Cap

The cap must be fully tightened to prevent loss of engine coolant (antifreeze), and to ensure that engine coolant (antifreeze) will return to the radiator from the coolant recovery tank.

The cap should be inspected and cleaned if there is any accumulation of foreign material on the sealing surfaces.

WARNING!

- **Do not open hot engine cooling system. Never add engine coolant (antifreeze) when the engine is overheated. Do not loosen or remove the cap to cool an overheated engine. Heat causes pressure to build up in the cooling system. To prevent scalding or injury, do not remove the pressure cap while the system is hot or under pressure.**
- **Do not use a pressure cap other than the one specified for your vehicle. Personal injury or engine damage may result.**

Disposal Of Used Engine Coolant

Used ethylene glycol-based engine coolant (antifreeze) is a regulated substance requiring proper disposal. Check with your local authorities to determine the disposal rules for your community. To prevent ingestion by animals or children, do not store ethylene glycol-based engine coolant in open containers or allow it to remain in puddles on the ground. If ingested by a child or pet, seek emergency assistance immediately. Clean up any ground spills immediately.

Coolant Level

The coolant bottle provides a quick visual method for determining that the coolant level is adequate. With the engine OFF and cold, the level of the engine coolant (antifreeze) in the bottle should be between the ranges indicated on the bottle.

The radiator normally remains completely full, so there is no need to remove the radiator/coolant pressure cap unless checking for engine coolant (antifreeze) freeze point or replacing coolant. Advise your service attendant of this. As long as the engine operating temperature is satisfactory, the coolant bottle need only be checked once a month.

When additional engine coolant (antifreeze) is needed to maintain the proper level, only OAT coolant that meets the requirements of Chrysler Material Standard MS.90032 should be added to the coolant bottle. Do not overfill.

Points To Remember

NOTE: When the vehicle is stopped after a few miles/kilometers of operation, you may observe vapor coming from the front of the engine compartment. This is normally a result of moisture from rain, snow, or high humidity accumulating on the radiator and being vaporized when the thermostat opens, allowing hot engine coolant (antifreeze) to enter the radiator.

If an examination of your engine compartment shows no evidence of radiator or hose leaks, the vehicle may be safely driven. The vapor will soon dissipate.

- Do not overfill the coolant expansion bottle.
- Check the coolant freeze point in the radiator and in the coolant expansion bottle. If engine coolant (antifreeze) needs to be added, the contents of the coolant expansion bottle must also be protected against freezing.
- If frequent engine coolant (antifreeze) additions are required, the cooling system should be pressure tested for leaks.
- Maintain engine coolant (antifreeze) concentration at a minimum of 50% OAT coolant (conforming to MS.90032) and distilled water for proper corrosion protection of your engine which contains aluminum components.
- Make sure that the coolant expansion bottle overflow hoses are not kinked or obstructed.
- Keep the front of the radiator clean. If your vehicle is equipped with air conditioning, keep the front of the condenser clean.

- Do not change the thermostat for Summer or Winter operation. If replacement is ever necessary, install ONLY the correct type thermostat. Other designs may result in unsatisfactory engine coolant (antifreeze) performance, poor gas mileage, and increased emissions.

Brake System

In order to assure brake system performance, all brake system components should be inspected periodically. Refer to the "Maintenance Schedule" for the proper maintenance intervals.

WARNING!

Riding the brakes can lead to brake failure and possibly a collision. Driving with your foot resting or riding on the brake pedal can result in abnormally

(Continued)

WARNING! *(Continued)*

high brake temperatures, excessive lining wear, and possible brake damage. You would not have your full braking capacity in an emergency.

Master Cylinder — Brake Fluid Level Check

Check the fluid level in the master cylinder immediately if the brake system warning light indicates system failure.

Check the fluid level in the master cylinder when performing underhood services.

Clean the top of the master cylinder area before removing the cap. Add fluid to bring the level up to the top of the "FULL" mark on the side of the master cylinder reservoir.

Overfilling of fluid is not recommended because it may cause leaking in the system.

Add enough fluid to bring the level up to the requirements described on the brake fluid reservoir. With disc brakes, fluid level can be expected to fall as the brake pads wear. However, low fluid level may be caused by a leak and a checkup may be needed.

Use only manufacturer's recommended brake fluid. Refer to "Fluids, Lubricants, and Genuine Parts" in "Maintaining Your Vehicle" for further information.

WARNING!

- **Use only manufacturer's recommended brake fluid. Refer to "Fluids, Lubricants, and Genuine Parts" in "Maintaining Your Vehicle" for further information. Using the wrong type of brake fluid can severely damage your brake system and/or impair its performance. The proper type of brake fluid for your vehicle is also identified on the original factory installed hydraulic master cylinder reservoir.**

(Continued)

WARNING! ***(Continued)***

- **To avoid contamination from foreign matter or moisture, use only new brake fluid or fluid that has been in a tightly closed container. Keep the master cylinder reservoir cap secured at all times. Brake fluid in a open container absorbs moisture from the air resulting in a lower boiling point. This may cause it to boil unexpectedly during hard or prolonged braking, resulting in sudden brake failure. This could result in a collision.**
- **Overfilling the brake fluid reservoir can result in spilling brake fluid on hot engine parts, causing the brake fluid to catch fire. Brake fluid can also damage painted and vinyl surfaces, care should be taken to avoid its contact with these surfaces.**

(Continued)

WARNING! ***(Continued)***

- **Do not allow petroleum based fluid to contaminate the brake fluid. Brake seal components could be damaged, causing partial or complete brake failure. This could result in a collision.**

Use only brake fluid that has been in a tightly closed container to avoid contamination from foreign matter or moisture.

Automatic Transmission

Selection Of Lubricant

It is important to use the proper transmission fluid to ensure optimum transmission performance and life. Use only the manufacturer's specified transmission fluid. Refer to "Fluids, Lubricants, and Genuine Parts" in this section for fluid specifications. It is important to maintain the transmission fluid at the correct level using the

recommended fluid. No chemical flushes should be used in any transmission; only the approved lubricant should be used.

CAUTION!

Using a transmission fluid other than the manufacturer's recommended fluid may cause deterioration in transmission shift quality and/or torque converter shudder. Refer to "Fluids, Lubricants, and Genuine Parts" in this section for fluid specifications.

Special Additives

The manufacturer strongly recommends against using any special additives in the transmission.

Automatic Transmission Fluid (ATF) is an engineered product and its performance may be impaired by supplemental additives. Therefore, do not add any fluid additives to the transmission. The only exception to this policy is the use of special dyes for diagnosing fluid leaks. Avoid using transmission sealers as they may adversely affect seals.

CAUTION!

Do not use chemical flushes in your transmission as the chemicals can damage your transmission components. Such damage is not covered by the New Vehicle Limited Warranty.

Fluid Level Check

The fluid level is preset at the factory and does not require adjustment under normal operating conditions. Routine fluid level checks are not required, therefore the transmission has no dipstick. Your authorized dealer can check your transmission fluid level using special service tools.

If you notice fluid leakage or transmission malfunction, visit your authorized dealer immediately to have the transmission fluid level checked. Operating the vehicle with an improper fluid level can cause severe transmission damage.

CAUTION!

If a transmission fluid leak occurs, visit your authorized dealer immediately. Severe transmission damage may occur. Your authorized dealer has the proper tools to adjust the fluid level accurately.

Fluid And Filter Changes

Under normal operating conditions, the fluid installed at the factory will provide satisfactory lubrication for the life of the vehicle.

Routine fluid and filter changes are not required. However, change the fluid and filter if the fluid becomes contaminated (with water, etc.), or if the transmission is disassembled for any reason.

All Wheel Drive (AWD) — If Equipped

The all wheel drive system consists of a transfer case and front differential. The exterior surface of these components should be inspected for evidence of fluid leaks. Confirmed leaks should be repaired as soon as possible.

The transfer case fluid fill/inspection plug is located in the middle of the rear housing. To inspect the transfer case fluid level, remove the fill/inspection plug. The fluid level should be even with the bottom of the hole. Use this plug to add fluid as required.

The front differential fill plug is located on the outer cover near the halfshaft attachment. To inspect the differential fluid level, remove the fill plug. The fluid level should be even with or slightly below the bottom of the hole.

Fluid Changes

Refer to the "Maintenance Schedule" for the proper maintenance intervals.

Rear Axle

For normal service, periodic fluid level checks are not required. When the vehicle is serviced for other reasons the exterior surfaces of the axle assembly should be inspected. If gear oil leakage is suspected inspect the fluid level. Refer to "Fluids, Lubricants, and Genuine Parts" in "Maintaining Your Vehicle" for further information.

Fluid Level Check

Check the fluid level by removing the fill plug on the axle. The fluid level should be at the bottom of the fill hole. Add fluid, if necessary, to maintain the proper level. Refer to "Fluids, Lubricants, and Genuine Parts" in "Maintaining Your Vehicle" for further information.

Change Axle Fluid

Refer to the "Maintenance Schedule" for the proper maintenance intervals.

Appearance Care And Protection From Corrosion

Protection Of Body And Paint From Corrosion

Vehicle body care requirements vary according to geographic locations and usage. Chemicals that make roads passable in snow and ice, and chemicals that are sprayed on trees and road surfaces during other seasons, are highly corrosive to the metal in your vehicle. Outside

parking, which exposes your vehicle to airborne contaminants, road surfaces on which the vehicle is operated, extreme hot or cold weather and other extreme conditions will have an adverse effect on paint, metal trim, and underbody protection.

The following maintenance recommendations will enable you to obtain maximum benefit from the corrosion resistance built into your vehicle.

What Causes Corrosion?

Corrosion is the result of deterioration or removal of paint and protective coatings from your vehicle.

The most common causes are:

- Road salt, dirt and moisture accumulation.
- Stone and gravel impact.
- Insects, tree sap and tar.
- Salt in the air near seacoast localities.
- Atmospheric fallout/industrial pollutants.

Washing

- Wash your vehicle regularly. Always wash your vehicle in the shade using MOPAR® Car Wash, or a mild car wash soap, and rinse the panels completely with clear water.
- If insects, tar, or other similar deposits have accumulated on your vehicle, use MOPAR® Super Kleen Bug and Tar Remover to remove.
- Use a high quality cleaner wax, such as MOPAR® Cleaner Wax to remove road film, stains and to protect your paint finish. Take care never to scratch the paint.
- Avoid using abrasive compounds and power buffing that may diminish the gloss or thin out the paint finish.

CAUTION!

- **Do not use abrasive or strong cleaning materials such as steel wool or scouring powder that will scratch metal and painted surfaces.**
- **Use of power washers exceeding 1,200 psi (8 274 kPa) can result in damage or removal of paint and decals.**

Special Care

- If you drive on salted or dusty roads or if you drive near the ocean, hose off the undercarriage at least once a month.
- It is important that the drain holes in the lower edges of the doors, rocker panels, and trunk be kept clear and open.
- If you detect any stone chips or scratches in the paint, touch them up immediately. The cost of such repairs is considered the responsibility of the owner.
- If your vehicle is damaged due to a collision or similar cause that destroys the paint and protective coating, have your vehicle repaired as soon as possible. The cost of such repairs is considered the responsibility of the owner.
- If you carry special cargo such as chemicals, fertilizers, de-icer salt, etc., be sure that such materials are well packaged and sealed.
- If a lot of driving is done on gravel roads, consider mud or stone shields behind each wheel.
- Use MOPAR® Touch Up Paint on scratches as soon as possible. Your authorized dealer has touch up paint to match the color of your vehicle.

Wheel And Wheel Trim Care

- All wheels and wheel trim, especially aluminum and chrome plated wheels, should be cleaned regularly with a mild soap and water to prevent corrosion.
- To remove heavy soil and/or excessive brake dust, use MOPAR® Wheel Cleaner.

NOTE: If your vehicle is equipped with Dark Vapor or Black Satin Chrome wheels DO NOT USE wheel cleaners, abrasives or polishing compounds. They will permanently damage this finish and such damage is not covered by the New Vehicle Limited Warranty. USE ONLY MILD SOAP AND WATER WITH A SOFT CLOTH. Used on a regular basis this is all that is required to maintain this finish.

CAUTION!

Do not use scouring pads, steel wool, a bristle brush, or metal polishes. Do not use oven cleaner. These products may damage the wheel's protective finish. Avoid automatic car washes that use acidic solutions or harsh brushes that may damage the wheel's protective finish. Only MOPAR® Wheel Cleaner or equivalent is recommended.

Stain Repel Fabric Cleaning Procedure — If Equipped

Stain Repel seats may be cleaned in the following manner:

- Remove as much of the stain as possible by blotting with a clean, dry towel.
- Blot any remaining stain with a clean, damp towel.

- For tough stains, apply MOPAR® Total Clean, or a mild soap solution to a clean, damp cloth and remove stain. Use a fresh, damp towel to remove soap residue.
- For grease stains, apply MOPAR® Multi-Purpose Cleaner to a clean, damp cloth and remove stain. Use a fresh, damp towel to remove soap residue.
- Do not use any harsh solvents or any other form of protectants on Stain Repel products.

Interior Care

Use MOPAR® Total Clean to clean fabric upholstery and carpeting.

Use MOPAR® Total Clean to clean vinyl upholstery.

MOPAR® Total Clean is specifically recommended for leather upholstery.

Your leather upholstery can be best preserved by regular cleaning with a damp soft cloth. Small particles of dirt can act as an abrasive and damage the leather upholstery and should be removed promptly with a damp cloth. Stubborn soils can be removed easily with a soft cloth and MOPAR® Total Clean. Care should be taken to avoid soaking your leather upholstery with any liquid. Please do not use polishes, oils, cleaning fluids, solvents, detergents, or ammonia-based cleaners to clean your leather upholstery. Application of a leather conditioner is not required to maintain the original condition.

WARNING!

Do not use volatile solvents for cleaning purposes. Many are potentially flammable, and if used in closed areas they may cause respiratory harm.

CAUTION!

Do not use Alcohol and Alcohol-based and/or Keton based cleaning products to clean leather seats, as damage to the seat may result.

Cleaning Headlights

Your vehicle is equipped with plastic headlights and fog lights that are lighter and less susceptible to stone breakage than glass headlights.

Plastic is not as scratch resistant as glass and therefore different lens cleaning procedures must be followed.

To minimize the possibility of scratching the lenses and reducing light output, avoid wiping with a dry cloth. To remove road dirt, wash with a mild soap solution followed by rinsing.

Do not use abrasive cleaning components, solvents, steel wool or other aggressive material to clean the lenses.

Glass Surfaces

All glass surfaces should be cleaned on a regular basis with MOPAR® Glass Cleaner, or any commercial household-type glass cleaner. Never use an abrasive type cleaner. Use caution when cleaning the inside rear window equipped with electric defrosters or windows equipped with radio antennas. Do not use scrapers or other sharp instrument that may scratch the elements.

When cleaning the rear view mirror, spray cleaner on the towel or rag that you are using. Do not spray cleaner directly on the mirror.

Cleaning Plastic Instrument Cluster Lenses

The lenses in front of the instruments in this vehicle are molded in clear plastic. When cleaning the lenses, care must be taken to avoid scratching the plastic.

1. Clean with a wet soft rag. A mild soap solution may be used, but do not use high alcohol content or abrasive cleaners. If soap is used, wipe clean with a clean damp rag.
2. Dry with a soft cloth.

Seat Belt Maintenance

Do not bleach, dye, or clean the belts with chemical solvents or abrasive cleaners. This will weaken the fabric. Sun damage can also weaken the fabric.

If the belts need cleaning, use MOPAR® Total Clean, a mild soap solution, or lukewarm water. Do not remove the belts from the vehicle to wash them. Dry with a soft cloth.

Replace the belts if they appear frayed or worn or if the buckles do not work properly.

WARNING!

A frayed or torn belt could rip apart in a collision and leave you with no protection. Inspect the belt system periodically, checking for cuts, frays, or loose parts. Damaged parts must be replaced immediately. Do not disassemble or modify the system. Seat belt assemblies must be replaced after a collision if they have been damaged (i.e., bent retractor, torn webbing, etc.).

Cleaning The Center Console Cupholders

Clean with a damp cloth or towel using a mild detergent with the cupholder in the center console.

NOTE: The cupholder cannot be removed.

FUSES

WARNING!

- **When replacing a blown fuse, always use an appropriate replacement fuse with the same amp rating as the original fuse. Never replace a fuse with another fuse of higher amp rating. Never replace a blown fuse with metal wires or any other material. Failure to use proper fuses may result in serious personal injury, fire and/or property damage.**
- **Before replacing a fuse, make sure that the ignition is off and that all the other services are switched off and/or disengaged.**
- **If the replaced fuse blows again, contact an authorized dealer.**

(Continued)

WARNING! ***(Continued)***

- **If a general protection fuse for safety systems (air bag system, braking system), power unit systems (engine system, gearbox system) or steering system blows, contact an authorized dealer.**

Front Power Distribution Center (Fuses)

The Front Power Distribution Center is located in the engine compartment. This module contains fuses and relays.

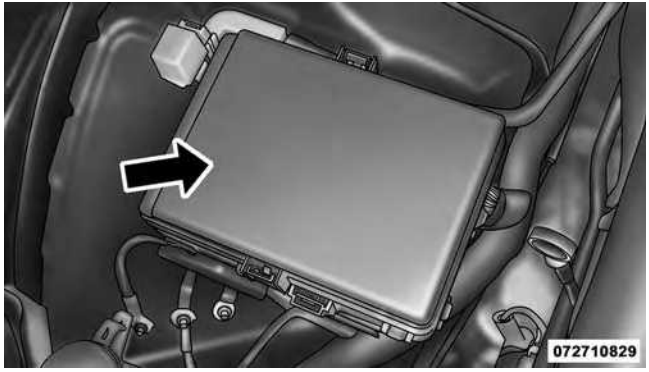

Front Power Distribution Center

CAUTION!

- **When installing the power distribution center cover, it is important to ensure the cover is properly positioned and fully latched. Failure to do so may allow water to get into the power distribution center and possibly result in an electrical system failure.**
- **When replacing a blown fuse, it is important to use only a fuse having the correct amperage rating. The use of a fuse with a rating other than indicated may result in a dangerous electrical system overload. If a properly rated fuse continues to blow, it indicates a problem in the circuit that must be corrected.**

Cavity	Cartridge Fuse	Mini-Fuse	Description
1	–	–	Fuse – Spare
2	40 Amp Green	–	Radiator Fan #1 – If Equipped
3	50 Amp Red	–	Power Steering #1 / Radiator Fan (6.2L Supercharged) – If Equipped
4	30 Amp Pink	–	Starter
5	40 Amp Green	–	Electronic Stability Control
6	30 Amp Pink	–	Electronic Stability Control
7	–	–	Fuse – Spare
8	20 Amp Blue	–	Police Ignition Run / ACC # 2
9	–	20 Amp Yellow	All-Wheel Drive Module – If Equipped
10	–	10 Amp Red	Security – If Equipped / Under hood Lamp – Police
11	–	20 Amp Yellow	Horns
12	–	10 Amp Red	Air Conditioning Clutch
13	–	–	Fuse – Spare
14	–	–	Fuse – Spare
15	–	20 Amp Yellow	Left HID – If Equipped

Cavity	Cartridge Fuse	Mini-Fuse	Description
16	–	20 Amp Yellow	Right HID – If Equipped
18	40 Amp Green	–	Radiator Fan #2 – If Equipped
19	50 Amp Red	–	Power Steering #2 / Radiator Fan (6.2L Supercharged)
20	30 Amp Pink	–	Wiper Motor
21	20 Amp Blue	–	Headlamp Washers – If Equipped / Police Feed
22	40 Amp Green / 20 Amp Blue – Police	–	Engine Cooling Pump (6.2L Supercharged) / Police Bat Feed # 3 – If Equipped
23	20 Amp Blue	–	Police Bat Feed # 1 – If Equipped
24	20 Amp Blue	–	Police Bat Feed # 3 – If Equipped
28	–	–	Fuse – Spare
29	–	15 Amp Blue	Transmission Control Module (LA/LD Police)
30	–	–	Fuse – Spare
31	–	25 Amp Clear	Engine Module
32	–	–	Fuse – Spare

Cavity	Cartridge Fuse	Mini-Fuse	Description
33	–	–	Fuse – Spare
34	–	25 Amp Clear	Powertrain #1
35	–	20 Amp Yellow	Powertrain #2
36	–	10 Amp Red	Anti-Lock Brake Module
37	–	10 Amp Red	Engine Controller/Rad Fan Relays – If Equipped
38	–	10 Amp Red	Airbag Module
39	–	10 Amp Red	Power Steering Module/AC Clutch Relay
48	–	10 Amp Red	AWD Module/Front Axle Disconnect (LX) / Adaptive Cruise (LA) – If Equipped
49	–	–	Fuse – Spare
50	–	–	Fuse – Spare
51	–	20 Amp Yellow	Vacuum Pump
52	–	10 Amp Red	Adaptive Cruise (LD/LX) – If Equipped
53	–	–	Fuse – Spare

Rear Power Distribution Center (Fuses)

There is also a power distribution center located in the trunk under the spare tire access panel. This center contains fuses and relays.

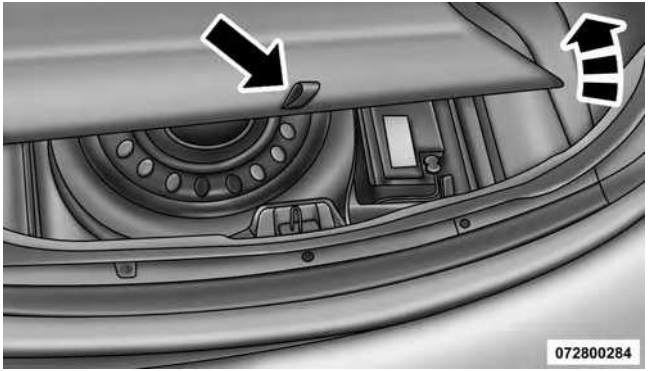

Opening The Access Cover

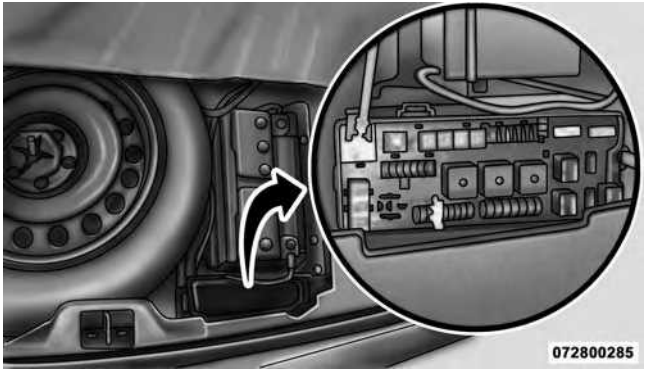

Rear Power Distribution Center

CAUTION!

- **When installing the power distribution center cover, it is important to ensure the cover is properly positioned and fully latched. Failure to do so may allow water to get into the power distribution center and possibly result in an electrical system failure.**
- **When replacing a blown fuse, it is important to use only a fuse having the correct amperage rating. The use of a fuse with a rating other than indicated may result in a dangerous electrical system overload. If a properly rated fuse continues to blow, it indicates a problem in the circuit that must be corrected.**

Cavity	Cartridge Fuse	Mini-Fuse	Description
2	60 Amp Yellow	—	Front PDC Feed #1
3	—	—	Fuse – Spare
4	60 Amp Yellow	—	Front PDC Feed #2

Cavity	Cartridge Fuse	Mini-Fuse	Description
5	30 Amp Pink	—	Sunroof / Dome Lamp – Police
6	40 Amp Green	—	Exterior Lighting #1
7	40 Amp Green	—	Exterior Lighting #2
8	30 Amp Pink	—	Interior Lighting
9	40 Amp Green	—	Power Locks
10	30 Amp Pink	—	Driver Door Control Module
11	30 Amp Pink	—	Passenger Door Control Module
12	—	20 Amp Yellow	Dual USB Center Console Rear/Cigar Lighter IP – If Equipped
15	40 Amp Green	—	HVAC Blower
16	20 Amp Blue	—	Left Spot Lamp – Police

Cavity	Cartridge Fuse	Mini-Fuse	Description
17	—	—	Fuse – Spare
18	30 Amp Pink	—	Mod Network Interface – Police
19	—	—	Fuse — Spare
20	—	—	Fuse — Spare
21	30 Amp Pink (6.2L Supercharged) 25 Amp Clear (LD STD)	—	Fuel Pump (6.2L Supercharged) Fuel Pump (LD STD)
22	—	20 Amp Yellow – Police 10 Amp Red – LA	Right Spot Lamp – Police Integrated Center Stack – LA
23	—	10 Amp Red	Fuel Door/Diagnostic Port
24	—	15 Amp Blue	Integrated Center Stack – LD/LX
25	—	10 Amp Red	Tire Pressure Monitor

Cavity	Cartridge Fuse	Mini-Fuse	Description
26	—	15 Amp Blue – LD/LX 25 Amp Clear – LA 30 Amp Green – LA 6.2L Supercharged	Transmission / Electronic Shift Module (LD/LX) Fuel Pump (LA) Fuel Pump (LA 6.2L Supercharged)
27	—	25 Amp Clear	Amplifier – If Equipped
31	—	25 Amp Breaker	Power Seats
32	—	15 Amp Blue	HVAC Module/Cluster
33	—	15 Amp Blue	Ignition Switch/RF hub Module/Steering Column Lock-LX If Equipped
34	—	10 Amp Red	Steering Column Module/Clock/Spare – Police
35	—	5 Amp Tan	Battery Sensor

Cavity	Cartridge Fuse	Mini-Fuse	Description
36	—	15 Amp Blue	Electronic Exhaust Valve – If Equipped
37	—	20 Amp Yellow	Radio
38	—	15 Amp Blue – LD/LX 20 Amp Yellow – LA	Console Power Outlet/ Console Media Hub (LD/ LX) Power Outlet Inside Arm Rest/Console Media Hub (LA)
40	—	—	Fuse — Spare
41	—	—	Fuse — Spare
42	30 Amp Pink	—	Rear Defrost
43	—	20 Amp Yellow	Rear Heated Seats/ Steering Wheel Module
44	—	10 Amp Red	Park Assist / Blind Spot / Rear View Camera

Cavity	Cartridge Fuse	Mini-Fuse	Description
45	—	15 Amp Blue	Cluster / Rearview Mirror / Compass(LDLX)/ Humidity Sensor
46	—	—	Fuse — Spare
47	—	10 Amp Red	Adaptive Front Lighting / Auto High BEAM / Day Time Running Lamps- If Equipped
48	—	20 Amp Yellow	Active Suspension – SRT
49	—	—	Fuse — Spare
50	—	—	Fuse — Spare
51	—	20 Amp Yellow	Front Heated Seats – If Equipped
52	—	10 Amp Red	Heated Cupholders/Rear Heated Seat Switches – If Equipped

Cavity	Cartridge Fuse	Mini-Fuse	Description
53	—	10 Amp Red	HVAC Module/In Car Temperature Sensor
54	—	10 Amp Red	Airbag Module (LA)
55	—	—	Fuse — Spare
56	—	—	Fuse — Spare
57	—	—	Fuse — Spare
58	—	10 Amp Red	Airbag Module (LD/LX)
59	—	20 Amp Yellow	Adjustable Pedals – Police
60	—	5 Amp Tan	Heated Washer Nozzles (LD)
61	—	20 Amp Yellow	Cigar Lighter (LA) – If Equipped
62	—	—	Fuse — Spare
63	—	—	Fuse — Spare
64	—	25 Amp Breaker	Rear Windows (LD/LX)

Cavity	Cartridge Fuse	Mini-Fuse	Description
65	—	10 Amp Red	Airbag Module
66	—	—	Fuse — Spare
67	—	10 Amp Red	Rain and Light Sensor/ Sunroof
68	—	10 Amp Red	Dual USB Power Outlet – R/A Sense (LD/LX) Rear Sunshade (LD/LX)
69	—	—	Fuse — Spare
70	—	—	Fuse — Spare

VEHICLE STORAGE

If you are leaving your vehicle dormant for more than 21 days, you may want to take these steps to protect your battery.

- Disconnect the negative cable from the battery.
- Anytime you store your vehicle, or keep it out of service (e.g., vacation) for two weeks or more, run the air conditioning system at idle for about five minutes in the fresh air and high blower setting. This will ensure adequate system lubrication to minimize the possibility of compressor damage when the system is started again.

REPLACEMENT BULBS

All of the interior bulbs are glass wedge base or glass cartridge types. Aluminum base bulbs are not approved and should not be used for replacement.

Interior Bulbs

	Bulb Number
Rear Courtesy/Reading Lamps	W5W
Rear Compartment (Trunk) Lamp	562
Overhead Console Reading Lamp	578
Visor Vanity Lamps	A6220
Glove Box Lamp – If Equipped	194
Door Courtesy	562
Shift Indicator Lamp	JKLE14140
Center High-Mount Stop Lamp (CHMSL)	LED (Serviced at Authorized Dealer)
Optional Door Map Pocket/Cup Holder	LED (Serviced at Authorized Dealer)
For lighted switches, see your authorized dealer for replacement instructions.	

Exterior Bulbs

	Bulb Number
Low/High Beam Headlamp (Standard Halogen Bi Function Projector)	HIR2
Low/High Beam Headlamp – High Intensity Discharge (Premium HID Bi Function Projector)	D3S (Serviced at Authorized Dealer)
Front Park/Turn Lamp	LED (Serviced at Authorized Dealer)
Front Fog Lamp – If Equipped	LED (Serviced at Authorized Dealer)
Front Side Marker	LED (Serviced at Authorized Dealer)
Rear Tail Lamp	LED (Serviced at Authorized Dealer)
Rear Stop/Turn Lamp	LED (Serviced at Authorized Dealer)
Rear Side Marker	LED (Serviced at Authorized Dealer)
Backup Lamp	LED (Serviced at Authorized Dealer)
License	LED (Serviced at Authorized Dealer)

BULB REPLACEMENT

NOTE: Lens fogging can occur under certain atmospheric conditions. This will usually clear as atmospheric conditions change to allow the condensation to change back into a vapor. Turning the lamps on will usually accelerate the clearing process.

Front Low/High Beam Headlamp And Park/Turn Lamp — Models With Halogen Headlamps

1. Open the hood.

NOTE: Removal of the air cleaner filter housing may be necessary prior to replacing bulbs in the headlamp assembly on the driver side of the vehicle.

2. Remove the large dust cap from the headlamp housing by turning it counterclockwise, turn the bulb counterclockwise and remove.

CAUTION!

Do not touch the new bulb with your fingers. Oil contamination will severely shorten bulb life. If the bulb comes in contact with an oily surface, clean the bulb with rubbing alcohol.

3. Disconnect the bulb from the socket assembly and install the replacement bulb.
4. Reinstall the bulb and socket assembly into the headlamp assembly, and then turn it clockwise.
5. Reinstall the dust cap.

Front Low/High Beam Headlamp And Park/Turn Lamp — Models With High Intensity Discharge Headlamps (HID)

HID Headlamps

The headlamps are a type of high voltage discharge tube. High voltage can remain in the circuit even with the headlamp switch off and the key removed. **Because of this, you should not attempt to service a headlamp bulb yourself. If a headlamp bulb fails, take your vehicle to an authorized dealer for service.**

WARNING!

A transient high voltage occurs at the bulb sockets of HID headlamps when the headlight switch is turned ON. It may cause serious electrical shock or electrocution if not serviced properly. See your authorized dealer for service.

NOTE: On vehicles equipped with HID headlamps, when the headlamps are turned on, there is a blue hue to the lights. This diminishes and becomes more white after approximately 10 seconds, as the system charges.

Front/Rear Side Marker Lamp

The Side Markers use LED sources that are not serviceable separately. The Side Markers must be replaced as an assembly, see your authorized dealer.

Front Fog Lamp

The Front Fog Lamps use LED sources that are not serviceable separately. The Front Fog Lamp must be replaced as an assembly, see your authorized dealer.

Backup Lamps

The Backup Lamps use LED sources that are not serviceable separately. The Applique must be replaced as an assembly, see your authorized dealer.

Center High Mounted Stop Lamp (CHMSL)

The CHMSL Lamp uses LED sources that are not serviceable separately. The CHMSL Lamp must be replaced as an assembly, see your authorized dealer

License Lamp

The License Lamp uses an LED source that is not serviceable separately. The License Lamp must be replaced as an assembly, see your authorized dealer.

FLUID CAPACITIES

	U.S.	Metric
Fuel (Approximate)		
All Engines	18.5 Gallons	69.9 Liters
Engine Oil With Filter		
3.6 Liter Engine (SAE 5W-20, API Certified)	6 Quarts	5.6 Liters
5.7 Liter Engine (SAE 5W-20, API Certified)	7 Quarts	6.6 Liters
Cooling System *		
3.6 Liter Engine – We recommend you use MOPAR® Antifreeze/ Engine Coolant 10 Year/150,000 Mile Formula or equivalent.	10 Quarts	9.5 Liters

	U.S.	Metric
5.7 Liter Engine without Severe Duty II Cooling System – We recommend you use MOPAR® Antifreeze/Engine Coolant 10 Year/ 150,000 Mile Formula.	14.5 Quarts	13.9 Liters
5.7 Liter Engine with Severe Duty II Cooling System – We recommend you use MOPAR® Antifreeze/Engine Coolant 10 Year/ 150,000 Mile Formula.	15 Quarts	14.3 Liters
* Includes heater and coolant recovery bottle filled to MAX level.		

FLUIDS, LUBRICANTS AND GENUINE PARTS

Engine

Component	Fluid, Lubricant, or Genuine Part
Engine Coolant	We recommend you use MOPAR® Antifreeze/Coolant 10 Year/150,000 Mile Formula OAT (Organic Additive Technology).
Engine Oil	We recommend you use API Certified SAE 5W-20 Engine Oil, meeting the requirements of Chrysler Material Standard MS-6395 such as MOPAR®, Pennzoil®, and Shell Helix®. Refer to your engine oil filler cap for correct SAE grade.
Engine Oil Filter	We recommend you use a MOPAR® Engine Oil Filter.
Spark Plugs	We recommend you use MOPAR® Spark Plugs.
Fuel Selection – 3.6L Engine	87 Octane.
Fuel Selection – 5.7L Engine	87 Octane Acceptable – 89 Octane Recommended.

CAUTION!

- **Mixing of engine coolant (antifreeze) other than specified Organic Additive Technology (OAT) engine coolant (antifreeze), may result in engine damage and may decrease corrosion protection. Organic Additive Technology (OAT) engine coolant is different and should not be mixed with Hybrid Organic Additive Technology (HOAT) engine coolant (antifreeze) or any "globally compatible" coolant (antifreeze). If a non-OAT engine coolant (antifreeze) is introduced into the cooling system in an emergency, the cooling system will need to be drained, flushed, and refilled with fresh OAT coolant (conforming to MS.90032), by an authorized dealer as soon as possible.**

(Continued)

CAUTION! ***(Continued)***

- **Do not use water alone or alcohol-based engine coolant (antifreeze) products. Do not use additional rust inhibitors or antirust products, as they may not be compatible with the radiator engine coolant and may plug the radiator.**
- **This vehicle has not been designed for use with propylene glycol-based engine coolant (antifreeze). Use of propylene glycol-based engine coolant (antifreeze) is not recommended.**

Chassis

Component	Fluid, Lubricant, Or Genuine Part
Automatic Transmission – 8-Speed Transmission	Use only MOPAR® ZF 8&9 Speed ATF™ Automatic Transmission Fluid, or equivalent. Failure to use the correct fluid may affect the function or performance of your transmission.
Brake Master Cylinder	We recommend you use MOPAR® DOT 3 and SAE J1703. If DOT 3 brake fluid is not available, then DOT 4 is acceptable.
Front Axle	We recommend you use MOPAR® Synthetic Gear Lubricant SAE 75W90 (API GL-5).
Rear Axle	We recommend you use MOPAR® OD Synthetic Gear Lubricant SAE 75W85 (API GL-5).
Transfer Case	We recommend you use MOPAR® Transfer Case Lubricant for BorgWarner 44–40.

MAINTENANCE SCHEDULES

CONTENTS

■ MAINTENANCE SCHEDULE 596
□ Maintenance Chart. 598

MAINTENANCE SCHEDULE

Your vehicle is equipped with an automatic oil change indicator system. The oil change indicator system will remind you that it is time to take your vehicle in for scheduled maintenance.

Based on engine operation conditions, the oil change indicator message will illuminate. This means that service is required for your vehicle. Operating conditions such as frequent short-trips, trailer tow, extremely hot or cold ambient temperatures, and E85 fuel usage will influence when the "Change Oil" or "Oil Change Required" message is displayed. Severe Operating Conditions can cause the change oil message to illuminate as early as 3,500 miles (5,600 km) since last reset. Have your vehicle serviced as soon as possible, within the next 500 miles (805 km).

The "Oil Change Required" message will be displayed in the DID and a single chime will sound, indicating that an oil change is necessary.

Your authorized dealer will reset the oil change indicator message after completing the scheduled oil change. If a scheduled oil change is performed by someone other than your authorized dealer, the message can be reset by referring to the steps described under "Driver Information Dispay (DID)" in "Understanding Your Instrument Panel" for further information.

NOTE: Under no circumstances should oil change intervals exceed 10,000 miles (16,000 km) or twelve months, whichever comes first.

Severe Duty All Models

Change Engine Oil at 4000 miles (6,500 km) if the vehicle is operated in a dusty and off road environment. This type of vehicle use is considered Severe Duty

Once A Month Or Before A Long Trip:

- Check engine oil level
- Check windshield washer fluid level
- Check tire pressure and look for unusual wear or damage. Rotate tires at the first sign of irregular wear, even if it occurs before your next scheduled service.
- Check the fluid levels of the coolant reservoir, brake master cylinder, and power steering (If Equipped) and fill as needed.
- Check function of all interior and exterior lights

Required Maintenance Intervals.

Refer to the maintenance schedules on the following page for the required maintenance intervals.

At Every Oil Change Interval As Indicated By Oil Change Indicator System:
• Change oil and filter
• Rotate the tires. **Rotate at the first sign of irregular wear, even if it occurs before your next scheduled service**
• Inspect battery and clean and tighten terminals as required
• Inspect brake pads, shoes, rotors, drums, hoses and park brake
• Inspect engine cooling system protection and hoses
• Inspect exhaust system
• Inspect engine air cleaner if using in dusty or off-road conditions

Maintenance Chart

Mileage or time passed (whichever comes first)	20,000	30,000	40,000	50,000	60,000	70,000	80,000	90,000	100,000	110,000	120,000	130,000	140,000	150,000
Or Years:	**2**	**3**	**4**	**5**	**6**	**7**	**8**	**9**	**10**	**11**	**12**	**13**	**14**	**15**
Or Kilometers:	**32,000**	**48,000**	**64,000**	**80,000**	**96,000**	**112,000**	**128,000**	**144,000**	**160,000**	**176,000**	**192,000**	**208,000**	**224,000**	**240,000**
Additional Inspections														
Inspect the CV joints.		X			X			X			X			X
Inspect front suspension, tie rod ends, boot seals, and replace if necessary.	X		X		X		X		X		X		X	
Inspect the rear axle fluid. Inspect the front axle fluid (All Wheel Drive Only).	X				X				X				X	
Inspect the brake linings, replace as necessary.	X		X		X		X		X		X		X	
Adjust park brake on vehicles equipped with four wheel disc brakes.	X		X		X		X		X		X		X	
Inspect transfer case fluid (All Wheel Drive Only).		X						X						X

Mileage or time passed (whichever comes first)	20,000	30,000	40,000	50,000	60,000	70,000	80,000	90,000	100,000	110,000	120,000	130,000	140,000	150,000
Or Years:	**2**	**3**	**4**	**5**	**6**	**7**	**8**	**9**	**10**	**11**	**12**	**13**	**14**	**15**
Or Kilometers:	**32,000**	**48,000**	**64,000**	**80,000**	**96,000**	**112,000**	**128,000**	**144,000**	**160,000**	**176,000**	**192,000**	**208,000**	**224,000**	**240,000**
Additional Maintenance														
Replace engine air filter.		X			X			X			X			X
Replace cabin/air conditioning filter.	X		X		X		X		X		X		X	
Replace spark plugs.**									X					
Flush and replace the engine coolant at 10 years or 150,000 miles (240,000 km) whichever comes first.									X					X
Inspect the transfer case fluid. Change the transfer case fluid; if using your vehicle for any of the following: police, taxi, fleet, off-road, or frequent trailer towing. (All Wheel Drive Only).					X						X			

Mileage or time passed (whichever comes first)	20,000	30,000	40,000	50,000	60,000	70,000	80,000	90,000	100,000	110,000	120,000	130,000	140,000	150,000
Or Years:	2	3	4	5	6	7	8	9	10	11	12	13	14	15
Or Kilometers:	32,000	48,000	64,000	80,000	96,000	112,000	128,000	144,000	160,000	176,000	192,000	208,000	224,000	240,000
Change the rear axle fluid and on models equipped with All Wheel Drive (AWD) change the front axle fluid if using your vehicle for any of the following: police, taxi, fleet, off-road, or frequent trailer towing.			X				X				X			
Inspect and replace PCV valve if necessary.									X					

** The spark plug change interval is mileage based only, yearly intervals do not apply.

WARNING!

- **You can be badly injured working on or around a motor vehicle. Do only service work for which you have the knowledge and the right equipment. If you have any doubt about your ability to perform a service job, take your vehicle to a competent mechanic.**
- **Failure to properly inspect and maintain your vehicle could result in a component malfunction and effect vehicle handling and performance. This could cause an accident.**

IF YOU NEED CONSUMER ASSISTANCE

CONTENTS

- SUGGESTIONS FOR OBTAINING SERVICE FOR YOUR VEHICLE 605
  - Prepare For The Appointment. 605
  - Prepare A List 605
  - Be Reasonable With Requests 605
- IF YOU NEED ASSISTANCE 605
  - Chrysler Group LLC Customer Center. 606
  - Chrysler Canada Inc. Customer Center 606
  - In Mexico Contact 607
  - Customer Assistance For The Hearing Or Speech Impaired (TDD/TTY). 607
  - Service Contract 607
- WARRANTY INFORMATION 608
- MOPAR® PARTS 609
- REPORTING SAFETY DEFECTS 609
  - In The 50 United States And Washington, D.C.. 609
  - In Canada. 609
- PUBLICATION ORDER FORMS 610
- DEPARTMENT OF TRANSPORTATION UNIFORM TIRE QUALITY GRADES 611

□ Treadwear 611
□ Traction Grades 611
□ Temperature Grades. 612

SUGGESTIONS FOR OBTAINING SERVICE FOR YOUR VEHICLE

Prepare For The Appointment

If you are having warranty work done, be sure to have the right papers with you. Take your warranty folder. All work to be performed may not be covered by the warranty. Discuss additional charges with the service manager. Keep a maintenance log of your vehicle's service history. This can often provide a clue to the current problem.

Prepare A List

Make a written list of your vehicle's problems or the specific work you want done. If you've had an accident or work done that is not on your maintenance log, let the service advisor know.

Be Reasonable With Requests

If you list a number of items and you must have your vehicle by the end of the day, discuss the situation with the service advisor and list the items in order of priority. At many authorized dealers, you may obtain a rental vehicle at a minimal daily charge. If you need a rental, it is advisable to make these arrangements when you call for an appointment.

IF YOU NEED ASSISTANCE

The manufacturer and its authorized dealer are vitally interested in your satisfaction. We want you to be happy with our products and services.

Warranty service must be done by an authorized dealer. We strongly recommend that you take the vehicle to an authorized dealer. They know your vehicle the best, and are most concerned that you get prompt and high quality service. The manufacturer's authorized dealer have the

facilities, factory-trained technicians, special tools, and the latest information to ensure the vehicle is fixed correctly and in a timely manner.

This is why you should always talk to an authorized dealer service manager first. Most matters can be resolved with this process.

- If for some reason you are still not satisfied, talk to the general manager or owner of the authorized dealer. They want to know if you need assistance.
- If an authorized dealer is unable to resolve the concern, you may contact the manufacturer's customer center.

Any communication to the manufacturer's customer center should include the following information:

- Owner's name and address
- Owner's telephone number (home and office)
- Authorized dealer name
- Vehicle Identification Number (VIN)
- Vehicle delivery date and mileage

Chrysler Group LLC Customer Center

P.O. Box 21–8004

Auburn Hills, MI 48321–8004

Phone: (800) 423-6343

Chrysler Canada Inc. Customer Center

P.O. Box 1621

Windsor, Ontario N9A 4H6

Phone: (800) 465-2001 English / (800) 387-9983 French

In Mexico Contact

Av. Prolongacion Paseo de la Reforma, 1240

Sante Fe C.P. 05109

Mexico, D. F.

In Mexico City: 5081-7568

Outside Mexico City: 1-800-505-1300

Customer Assistance For The Hearing Or Speech Impaired (TDD/TTY)

To assist customers who have hearing difficulties, the manufacturer has installed special TDD (Telecommunication Devices for the Deaf) equipment at its customer center. Any hearing or speech impaired customer, who has access to a TDD or a conventional teletypewriter (TTY) in the United States, can communicate with the manufacturer by dialing 1-800-380-CHRY.

Canadian residents with hearing difficulties that require assistance can use the special needs relay service offered by Bell Canada. For TTY teletypewriter users, dial 711 and for Voice callers, dial 1-800-855-0511 to connect with a Bell Relay Service operator.

Service Contract

You may have purchased a service contract for a vehicle to help protect you from the high cost of unexpected repairs after the manufacturer's New Vehicle Limited Warranty expires. The manufacturer stands behind only the manufacturer's service contracts. If you purchased a manufacturer's service contract, you will receive Plan Provisions and an Owner Identification Card in the mail within three weeks of the vehicle delivery date. If you have any questions about the service contract, call the manufacturer's Service Contract National Customer Hotline at 1-800-521-9922 (Canadian residents, call (800) 465-2001 English / (800) 387-9983 French).

The manufacturer will not stand behind any service contract that is not the manufacturer's service contract. It is not responsible for any service contract other than the manufacturer's service contract. If you purchased a service contract that is not a manufacturer's service contract, and you require service after the manufacturer's New Vehicle Limited Warranty expires, please refer to the contract documents, and contact the person listed in those documents.

We appreciate that you have made a major investment when you purchased the vehicle. An authorized dealer has also made a major investment in facilities, tools, and training to assure that you are absolutely delighted with the ownership experience. You will be pleased with their sincere efforts to resolve any warranty issues or related concerns.

WARNING!

Engine exhaust (internal combustion engines only), some of its constituents, and certain vehicle components contain, or emit, chemicals known to the State of California to cause cancer and birth defects, or other reproductive harm. In addition, certain fluids contained in vehicles and certain products of component wear contain, or emit, chemicals known to the State of California to cause cancer and birth defects, or other reproductive harm.

WARRANTY INFORMATION

See the Warranty Information Booklet, located on the DVD, for the terms and provisions of Chrysler Group LLC warranties applicable to this vehicle and market.

MOPAR® PARTS

MOPAR® fluids, lubricants, parts, and accessories are available from an authorized dealer. They are recommended for your vehicle in order to help keep the vehicle operating at its best.

REPORTING SAFETY DEFECTS

In The 50 United States And Washington, D.C.

If you believe that your vehicle has a defect that could cause a crash or cause injury or death, you should immediately inform the National Highway Traffic Safety Administration (NHTSA) in addition to notifying the manufacturer.

If NHTSA receives similar complaints, it may open an investigation, and if it finds that a safety defect exists in a group of vehicles, it may order a recall and remedy campaign. However, NHTSA cannot become involved in individual problems between you, your authorized dealer, and the manufacturer.

To contact NHTSA, you may either call the Auto Safety Hotline toll free at 1-888-327-4236 (TTY: 1-800-424- 9153), or go to http://www.safercar.gov; or write to: Administrator, NHTSA, 1200 New Jersey Avenue, SE., West Building, Washington, D.C. 20590.

You can also obtain other information about motor vehicle safety from http://www.safercar.gov.

In Canada

If you believe that your vehicle has a safety defect, you should contact the Customer Service Department immediately. Canadian customers who wish to report a safety defect to the Canadian government should contact Transport Canada, Motor Vehicle Defect Investigations and Recalls at 1-800-333-0510 or go to http://www.tc.gc.ca/roadsafety/

PUBLICATION ORDER FORMS

To order the following manuals, you may use either the website or the phone numbers listed below. Visa, Mastercard, American Express, and Discover orders are accepted. If you prefer mailing your payment, please call for an order form.

NOTE: A street address is required when ordering manuals (no P.O. Boxes).

Service Manuals

These comprehensive Service Manuals provide the information that students and professional technicians need in diagnosing/troubleshooting, problem solving, maintaining, servicing, and repairing Chrysler Group LLC vehicles. A complete working knowledge of the vehicle, system, and/or components is written in straightforward language with illustrations, diagrams, and charts.

Diagnostic Procedure Manuals

Diagnostic Procedure Manuals are filled with diagrams, charts and detailed illustrations. These practical manuals make it easy for students and technicians to find and fix problems on computer-controlled vehicle systems and features. They show exactly how to find and correct problems the first time, using step-by-step troubleshooting and drivability procedures, proven diagnostic tests and a complete list of all tools and equipment.

Owner's Manuals

These Owner's Manuals have been prepared with the assistance of service and engineering specialists to acquaint you with specific Chrysler Group LLC vehicles. Included are starting, operating, emergency and maintenance procedures as well as specifications, capabilities and safety tips.

Call toll free at:

- **1-800-890-4038 (U.S.)**
- **1-800-387-1143 (Canada)**

Or

Visit us on the Worldwide Web at:

- www.techauthority.com

DEPARTMENT OF TRANSPORTATION UNIFORM TIRE QUALITY GRADES

The following tire grading categories were established by the National Highway Traffic Safety Administration. The specific grade rating assigned by the tire's manufacturer in each category is shown on the sidewall of the tires on your vehicle.

All passenger car tires must conform to Federal safety requirements in addition to these grades.

Treadwear

The Treadwear grade is a comparative rating, based on the wear rate of the tire when tested under controlled conditions on a specified government test course. For example, a tire graded 150 would wear one and one-half times as well on the government course as a tire graded 100. The relative performance of tires depends upon the actual conditions of their use, however, and may depart significantly from the norm due to variations in driving habits, service practices, and differences in road characteristics and climate.

Traction Grades

The Traction grades, from highest to lowest, are AA, A, B, and C. These grades represent the tire's ability to stop on wet pavement, as measured under controlled conditions on specified government test surfaces of asphalt and concrete. A tire marked C may have poor traction performance.

WARNING!

The traction grade assigned to this tire is based on straight-ahead braking traction tests, and does not include acceleration, cornering, hydroplaning, or peak traction characteristics.

Temperature Grades

The temperature grades are A (the highest), B, and C, representing the tire's resistance to the generation of heat and its ability to dissipate heat, when tested under controlled conditions on a specified indoor laboratory test wheel. Sustained high temperature can cause the material of the tire to degenerate and reduce tire life, and excessive temperature can lead to sudden tire failure. The grade C corresponds to a level of performance, which all passenger car tires must meet under the Federal Motor Vehicle Safety Standard No. 109. Grades B and A represent higher levels of performance on the laboratory test wheel, than the minimum required by law.

WARNING!

The temperature grade for this tire is established for a tire that is properly inflated and not overloaded. Excessive speed, under-inflation, or excessive loading, either separately or in combination, can cause heat buildup and possible tire failure.

INDEX

About Your Brakes 418
ABS (Anti-Lock Brake System) 421
Adaptive Cruise Control (ACC) (Cruise Control) . . .178
Adding Engine Coolant (Antifreeze) 555
Adding Fuel 473
Adding Washer Fluid 549
Additives, Fuel 468
Adjustable Pedals 172
Air bag 59
Air Bag
  Advance Front Air Bag 60
  Air Bag Components 59
  Air bag Operation 62
  Air Bag Warning Light 71
  Driver Knee Air Bag 64
  Enhanced Accident Response 70
  Event Data Recorder (EDR) 74
  Front Air Bag 59
  If A Deployment Occurs 69
  Knee Impact Bolsters 63
  Maintaining Your Air Bag System 73
  Side Air Bags 64
  Transporting Pets 96
Air bag Deployment 59
Air bag Light 71
Air bag Maintenance 73
Air Cleaner, Engine (Engine Air Cleaner Filter) 543
Air Conditioner Maintenance 545
Air Conditioning 352
Air Conditioning Controls 352
Air Conditioning Filter 369
Air Conditioning, Operating Tips 368
Air Conditioning Refrigerant 545
Air Conditioning System 352
Air Pressure, Tires 446
Alarm
  Arm The System 19
Alarm Light 263

Alarm, Panic 23
Alarm (Security Alarm) 18
Alarm System (Security Alarm) 18
All Wheel Drive (AWD) 411
Alterations/Modifications, Vehicle 7
Antifreeze (Engine Coolant) 554
  Disposal 557
Anti-Lock Brake System (ABS) 421
Anti-Lock Warning Light 263
Appearance Care 564
Arming System (Security Alarm) 18
Assist, Hill Start 428
Auto Down Power Windows 40
Automatic Door Locks 31
Automatic Headlights 153
Automatic High Beams 154
Automatic Temperature Control (ATC) 352
Automatic Transmission 401
  Adding Fluid 563
  Autostick 408
  Fluid and Filter Changes 563
  Fluid Change 563
  Fluid Level Check 561
  Fluid Type 593
  Special Additives 562
Automatic Transmission Limp Home Mode 407
Autostick 408
Auto Unlock, Doors 32
Auto Up Power Windows 40
Axle Fluid 593
Axle Lubrication 593

Battery 543
  Keyless Transmitter Replacement (RKE) 24
  Location 544
Belts, Seat 99
Body Mechanism Lubrication 548
B-Pillar Location 439

Brake Assist System 424
Brake Control System, Electronic 421
Brake Fluid 593
Brake, Parking 418
Brakes 420
Brake System 420
  Anti-Lock (ABS) 421
  Fluid Check 559
  Master Cylinder 559
  Parking 418
  Warning Light 263
Brake/Transmission Interlock. 400
Break-In Recommendations, New Vehicle 96
Brightness, Interior Lights 161
Bulb Replacement 585
Bulbs, Light 102

Camera, Rear 227
Capacities, Fluid 589
Caps, Filler
  Oil (Engine) 541
  Radiator (Coolant Pressure) 556
Carbon Monoxide Warning 98
Cargo (Vehicle Loading) 477
Car Washes 565
Cellular Phone 351
Certification Label. 477
Chains, Tire 456
Changing A Flat Tire 498
Chart, Tire Sizing 434
Check Engine Light (Malfunction Indicator Light) . .535
Checking Your Vehicle For Safety 97
Checks, Safety 97
Child Restraint 75
Child Restraints
  Booster Seats 79
  Center Seat LATCH 88
  Child Restraints 75

Child Seat Installation 93
How To Stow An Unused ALR Seat Belt 89
Infants And Child Restraints 78
Install A LATCH-compatible Child Restraint 88
Lower Anchors And Tethers For Children 82
Older Children And Child Restraints 78
Seating Positions 81
Child Safety Locks 32
Clean Air Gasoline 466
Cleaning
Wheels 567
Climate Control 352
Automatic 352
Coin Holder 252
Cold Weather Operation 396
Compact Spare Tire 451
Connector
UCI 349
Universal Consumer Interface (UCI) 349
Console, Floor 252
Contract, Service 607
Coolant Pressure Cap (Radiator Cap) 556
Cooling System 552
Adding Coolant (Antifreeze) 555
Coolant Capacity 589
Coolant Level 553
Disposal of Used Coolant 557
Drain, Flush, and Refill 553
Inspection 557
Points to Remember 558
Pressure Cap 556
Radiator Cap 556
Selection of Coolant (Antifreeze) 554
Corrosion Protection 564
Cruise Control (Speed Control) 178
Cupholders 249
Customer Assistance 605

Customer Programmable Features 291

Data Recorder, Event 74
Daytime Brightness, Interior Lights. 162
Daytime Running Lights 156
Dealer Service. 537
Deck Lid, Emergency Release 45
Deck Lid, Power Release 43
Defroster, Rear Window. 255
Defroster, Windshield 100
Delay (Intermittent) Wipers 163
Diagnostic System, Onboard 535
Dimmer Switch, Headlight. 158
Dipsticks
  Oil (Engine) 538
Disabled Vehicle Towing 526
Disposal
  Antifreeze (Engine Coolant) 557
Door Locks
  Child-Protection Door Lock — Rear Doors 32
  Door Locks 22
  Key Fob 29
  Remote 29
  Remote Keyless Entry (RKE) 29
Door Locks, Automatic 31
Driver Information Display
  DID 275
  Instrument Cluster Display 275
Driving
  Through Flowing, Rising, or Shallow Standing
  Water 414

E-85 Fuel 470
Electrical Power Outlets. 244
Electric Rear Window Defrost. 255
Electric Remote Mirrors 119
Electronic Brake Control System 421

Brake Assist System 424
Traction Control System 423
Electronic Power Distribution Center (Fuses) 572
Electronic Speed Control (Cruise Control) 174
Electronic Stability Control (ESC) 425
Emergency Deck Lid Release 45
Emergency, In Case of
Freeing Vehicle When Stuck 521
Jacking 498
Jump Starting 517
Overheating 495
Towing 526
Emergency Trunk Release 45
Emission Control System Maintenance 535
Engine 534
Air Cleaner 543
Block Heater 398
Break-In Recommendations 96
Checking Oil Level 538
Compartment 533
Compartment Identification 533
Coolant (Antifreeze) 553
Cooling 552
Exhaust Gas Caution 98
Fails to Start 396
Flooded, Starting 396
Fuel Requirements 464
Jump Starting 517
Oil 538
Oil Filler Cap 541
Oil Selection 540
Oil Synthetic 542
Overheating 495
Starting 393
Temperature Gauge 263
Engine Oil Viscosity 541
Engine Oil Viscosity Chart 541
Enhanced Accident Response Feature 70

Entry System, Illuminated 20
Ethanol 466
Event Data Recorder 74
Exhaust Gas Caution. 98
Exhaust System 98
Exterior Folding Mirrors 118
Exterior Lighting. 152
Exterior Lights 102

Filters
  Air Cleaner 543
  Air Conditioning 369
  Engine Oil 542
  Engine Oil Disposal 542
Flashers 495
  Hazard Warning 495
  Turn Signal 102
Flash-To-Pass 158

Flexible Fuel Vehicles
  Cruising Range 472
  Engine Oil 472
  Fuel Requirements 470
  Maintenance 473
  Replacement Parts 472
  Starting 472
Flooded Engine Starting 396
Floor Console 252
Fluid, Brake 593
Fluid Capacities 589
Fluid Leaks 102
Fluid Level Checks 564
  Automatic Transmission 562
  Brake 559
  Cooling System 553
  Engine Oil 538
  Transfer Case 563
Fluids, Lubricants and Genuine Parts 591

Fog Lights 156
Folding Rear Seat 144
Forward Collision Warning 206
Freeing A Stuck Vehicle 521
Fuel 464
  Additives 468
  Clean Air 466
  Ethanol 466
  Gasoline 464
  Gauge 263
  Materials Added 468
  Methanol 466
  Octane Rating 464
  Requirements 464
  Specifications 591
  Tank Capacity 589
Fuel, Flexible 470
Fuses 571

Garage Door Opener (HomeLink®) 232
Gasoline, Clean Air 466
Gasoline (Fuel) 464
Gasoline, Reformulated 466
Gauges
  Coolant Temperature 263
  Fuel 263
  Odometer 263
  Speedometer 263
  Tachometer 263
Gear Ranges 402
General Information 464
Glass Cleaning 569
Gross Axle Weight Rating 478
Gross Vehicle Weight Rating. 478
GVWR 478

Hazard
Driving Through Flowing, Rising, or Shallow Standing Water 414
Hazard Warning Flasher 495
Headlights 588
Automatic 153
Cleaning 569
Delay 155
High Beam/Low Beam Select Switch 158
Lights On Reminder 156
On With Wipers 153
Passing 158
Switch 152
Time Delay 155
Washers 549
Headlight Washers 549
Head Restraints 140
Head Rests 140
Heated Mirrors 120
Heated Seats 135
Heater 352
Heater, Engine Block 398
High Beam/Low Beam Select (Dimmer) Switch 158
Hill Start Assist 428
Hitches
Trailer Towing 482
Holder, Coin 252
Hood Release 150

Ignition
Key 12
Illuminated Entry 20
Immobilizer (Sentry Key) 16
Information Center, Vehicle 272
Inside Rearview Mirror 110
Instrument Cluster 261
Instrument Panel and Controls 260
Instrument Panel Lens Cleaning 570

Interior Appearance Care 568
Interior Lights 161
Intermittent Wipers (Delay Wipers) 163
Introduction 4
iPod®/USB/MP3 Control 349

Jack Location 498
Jack Operation 498
Jump Starting 517

Key Fob 13
Arm The Alarm 19
Lock The Doors 22
Panic Alarm 23
Programming Additional Key Fobs 18
Programming Additional Transmitters 18
Remote Keyless Entry (RKE) 21
Unlatch The Trunk 23
Unlock The Doors 22
Key-In Reminder 15
Keyless Enter-N-Go 34
Keyless Enter-N-Go™ 34
Enter The Trunk 23
Lock The Vehicle's Doors 22
Passive Entry 34
Passive Entry Programming 34
Unlock From The Driver's Side 22
Unlock From The Passenger Side 22
Keyless Entry System 21
Keyless Go 12
Key, Replacement 17
Keys 12
Key, Sentry (Immobilizer) 16

Lane Change and Turn Signals 158
Lane Change Assist 158
LaneSense 210
Lap/Shoulder Belts 49

Latches 102
Lead Free Gasoline 464
Leaks, Fluid 102
Life of Tires 454
Light Bulbs. 102
Lights 102
  Airbag 71
  Alarm 263
  Anti-Lock 263
  Automatic Headlights 153
  Brake Assist Warning 431
  Brake Warning 263
  Bulb Replacement 587
  Daytime Running 156
  Dimmer Switch, Headlight 157
  Electronic Stability Program (ESP) Indicator 431
  Exterior 102
  Fog 156
  Headlights 152
  Headlights On Reminder 156
  Headlights On With Wipers 153
  Headlight Switch 152
  High Beam 158
  High Beam Indicator 263
  High Beam/Low Beam Select 158
  Illuminated Entry 20
  Instrument Cluster 152
  Intensity Control 161
  Interior 161
  License 589
  Lights On Reminder 156
  Malfunction Indicator (Check Engine) 263
  Parade Mode (Daytime Brightness) 162
  Passing 158
  Reading 159
  Seat Belt Reminder 263
  Security Alarm 263
  Service 585

Service Engine Soon (Malfunction Indicator) 263
Tire Pressure Monitoring (TPMS) 263
Traction Control 431
Turn Signal 102
Vanity Mirror 120
Warning (Instrument Cluster Description) 263
Loading Vehicle 477
Capacities 479
Tires 439
Load Leveling System 256
Locks 29
Automatic Door 31
Auto Unlock 32
Child Protection 32
Door 29
Power Door 31
Low Tire Pressure System 458
Lubrication, Body 548
Lug Nuts 496

Maintenance Free Battery. 543
Maintenance Procedures 538
Maintenance Schedule 596
Malfunction Indicator Light (Check Engine). 263
Manual, Service 610
Master Cylinder (Brakes) 559
Memory Feature (Memory Seat) 146
Memory Seat 146
Memory Seats and Radio 146
Methanol 466
Mirrors 110
Electric Powered 119
Electric Remote 119
Exterior Folding 118
Heated 120
Outside 117
Rearview 110

Vanity 120
Modifications/Alterations, Vehicle 7
Monitor, Tire Pressure System 458
MOPAR® Parts. 537
MTBE/ETBE 466
Multi-Function Control Lever. 157

New Vehicle Break-In Period 96

Occupant Restraints 46
Octane Rating, Gasoline (Fuel) 464
Odometer. 263
Trip 263
Oil, Engine. 275
Capacity 589
Change Interval 540
Checking 538
Dipstick 538
Disposal 542
Filter 542
Filter Disposal 542
Identification Logo 540
Materials Added to 542
Recommendation 540
Synthetic 542
Viscosity 541
Oil Filter, Selection 542
Onboard Diagnostic System 535
Operating Precautions 535
Operator Manual (Owner's Manual) 4
Outside Rearview Mirrors 117
Overheating, Engine 495
Owner's Manual (Operator Manual) 4

Paint Care 564
Panic Alarm. 23
Parking Brake. 418
ParkSense® System, Rear. 218

Passing Light 158
Passive Entry 34
Pedals, Adjustable 172
Performance 283
Pets 96
Placard, Tire and Loading Information 440
Power
  Brakes 420
  Deck Lid Release 43
  Distribution Center (Fuses) 576
  Door Locks 31
  Mirrors 119
  Outlet (Auxiliary Electrical Outlet) 244
  Seats 132
  Sunroof 241
  Tilt/Telescoping Steering Column 169
  Windows 39
Power Steering Fluid 593
Pregnant Women and Seat Belts 55
Preparation for Jacking 500
Pretensioners
  Seat Belts 56
Programmable Electronic Features 293
Programmable Features 291

Radial Ply Tires 447
Radiator Cap (Coolant Pressure Cap) 556
Radio Operation 351
Radio Remote Controls 350
Radio (Sound Systems) 348
Rain Sensitive Wiper System 166
Rear Axle (Differential) 564
Rear Camera 227
Rear Cupholder 250
Rear ParkSense System 218
Rear Seat, Folding 144
Rear Window Defroster 255
Rear Window Features 255

Recorder, Event Data 74
Recreational Towing 492
Reformulated Gasoline 466
Refrigerant 546
Reminder, Lights On 156
Reminder, Seat Belt 48
Remote Control
  Starting System 26
Remote Keyless Entry (RKE)
  Arm The Alarm 19
  FCC General Information 25
  Lock The Doors 22
  Panic Alarm 23
  Programming Additional Key Fobs 18
  Programming Additional Transmitters 18
  Remote Keyless Entry (RKE) 21
  Unlatch The Trunk 23
  Unlock The Doors 22
Remote Sound System (Radio) Controls 350
Remote Starting
  Uconnect® Customer Programmable Features . . .304
  Uconnect® Settings 304
Remote Starting System 26
Remote Trunk Release 43
Replacement Bulbs 585
Replacement Keys 17
Replacement Parts 537
Replacement Tires 454
Reporting Safety Defects 609
Restraint, Head 140
Restraints, Child 75
Restraints, Occupant 46
Rocking Vehicle When Stuck 521
Rotation, Tires 457

Safety Checks Inside Vehicle 99
Safety Checks Outside Vehicle 102
Safety Defects, Reporting 609

Safety, Exhaust Gas 98
Safety Information, Tire 432
Safety Tips 97
Schedule, Maintenance 596
Seat Belt
  Automatic Locking Retractor (ALR) 56
  Energy Management Feature 56
  Lap/Shoulder Belts 49
  Lap/Shoulder Belt Untwisting 53
  Pregnant Women 55
  Seat Belt Extender 55
  Seat Belt Pretensioner 56
  Seat Belt Reminder 48
  Seat Belt System 46
Seat Belt Maintenance 570
Seat Belt Reminder 48
Seat Belts 47
  Adjustable Upper Shoulder Anchorage 54
  Child Restraint 75
  Extender 55
  Front Seat 47
  Inspection 99
  Operating Instructions 51
  Pregnant Women 55
  Pretensioners 56
  Rear Seat 49
  Reminder 263
  Untwisting Procedure 53
Seats 131
  Adjustment 131
  Easy Entry 149
  Head Restraints 140
  Heated 135
  Height Adjustment 132
  Memory 146
  Power 132
  Rear Folding 144
  Seatback Release 144

Tilting 132
Security Alarm 18
Arm The System 19
Selection of Coolant (Antifreeze). 591
SENTRY KEY®
FCC General Information 18
Key Programming 18
Sentry Key (Immobilizer) 16
Sentry Key Replacement 17
Service Assistance 605
Service Contract 607
Service Engine Soon Light (Malfunction Indicator) . .263
Service Manuals 610
Shifting 398
Automatic Transmission 398
Shoulder Belts 49
Shoulder Belt Upper Anchorage. 54
Side View Mirror Adjustment. 117
Signals, Turn 102
Snow Chains (Tire Chains). 456
Snow Tires 449
Spare Tire. 451
Spark Plugs 591
Specifications
Fuel (Gasoline) 591
Oil 591
Speed Control (Cruise Control). 174
Speedometer. 263
Starting 26
Automatic Transmission 393
Cold Weather 396
Engine Fails to Start 396
Remote 26
Starting and Operating 393
Starting Procedures 393
Steering
Column Controls 157
Column Lock 168

Tilt Column 168
Wheel, Heated 170
Wheel, Tilt 168
Steering Wheel Audio Controls 350
Steering Wheel Mounted Sound System Controls . . .350
Storage 584
Storage, Vehicle. 368
Storing Your Vehicle 584
Stuck, Freeing. 521
Sunglasses Storage 232
Sun Roof 241
Supplemental Restraint System - Airbag 60
Synthetic Engine Oil 542
System, Remote Starting 26

Tachometer. 263
Telescoping Steering Column 168
Temperature Control, Automatic (ATC) 360
Temperature Gauge, Engine Coolant 263
Tilt Steering Column 168
Time Delay, Headlight 155
Tire and Loading Information Placard 439
Tire Markings 432
Tires 102
Aging (Life of Tires) 454
Air Pressure 444
Chains 456
Changing 498
Compact Spare 451
General Information 444
High Speed 447
Inflation Pressures 446
Jacking 498
Life of Tires 454
Load Capacity 439
Pressure Monitor System (TPMS) 458
Pressure Warning Light 263
Quality Grading 611

Radial 447
Replacement 454
Rotation 457
Safety 432
Sizes 434
Snow Tires 449
Spare Tire 498
Spinning 453
Trailer Towing 488
Tread Wear Indicators 453
Tire Safety Information 432
Tire Service Kit 507
Tongue Weight/Trailer Weight 484
To Open Hood 150
Towing 479
Disabled Vehicle 526
Guide 484
Recreational 492
Weight 484
Towing Vehicle Behind a Motorhome 492
Traction 412
Traction Control 423
Trailer Towing 479
Cooling System Tips 492
Hitches 482
Minimum Requirements 486
Tips 491
Trailer and Tongue Weight 484
Wiring 489
Trailer Towing Guide. 484
Trailer Weight. 484
Transfer Case 563
Fluid 563
Maintenance 564
Transmission
Automatic 398
Fluid 561
Maintenance 561

Shifting 398
Transmitter Battery Service (Remote Keyless Entry) . .24
Transmitter Programming (Remote Keyless Entry) . . .24
Transmitter, Remote Keyless Entry (RKE) 21
Transporting Pets 96
Tread Wear Indicators 453
Trip Odometer 263
Trunk Lid (Deck Lid) 43
Trunk Release, Emergency 45
Trunk Release Remote Control 43
Turn Signals 158

UCI Connector 349
Uconnect®
Customer Programmable Features 304
Operation 348
Uconnect® Settings 22
Uconnect® Settings 22
Customer Programmable Features 34
Passive Entry Programming 34
Uconnect® Settings 302
Uconnect® Voice Command 371
Uniform Tire Quality Grades 611
Universal Consumer Interface (UCI) Connector 349
Unleaded Gasoline 464
Untwisting Procedure, Seat Belt 53

Vanity Mirrors 120
Vehicle Certification Label 477
Vehicle Identification Number (VIN) 6
Vehicle Loading 441
Vehicle Modifications/Alterations 7
Vehicle Security Alarm (Security Alarm) 18
Vehicle Storage 368
Viscosity, Engine Oil 541
Voice Recognition System (VR) 371

Warning Lights (Instrument Cluster Description) . . .263

Warnings and Cautions 6
Warranty Information 608
Washer
  Adding Fluid 549
Washers, Windshield 164
Washing Vehicle 565
Water
  Driving Through 414
Wheel and Wheel Trim 567
Wheel and Wheel Trim Care 567
Wind Buffeting 43
Window Fogging 369
Windows 39
  Power 39
  Reset Auto-Up 41
  Wind Buffeting 43
Windshield Defroster 100
Windshield Washers 163
  Fluid 549
Windshield Wiper Blades 549
Windshield Wipers 163
Wiper Blade Replacement 549
Wipers, Intermittent 163
Wipers, Rain Sensitive 166

INSTALLATION OF RADIO TRANSMITTING EQUIPMENT

Special design considerations are incorporated into this vehicle's electronic system to provide immunity to radio frequency signals. Mobile two-way radios and telephone equipment must be installed properly by trained personnel. The following must be observed during installation.

The positive power connection should be made directly to the battery and fused as close to the battery as possible. The negative power connection should be made to body sheet metal adjacent to the negative battery connection. This connection should not be fused.

Antennas for two-way radios should be mounted on the roof or the rear area of the vehicle. Care should be used in mounting antennas with magnet bases. Magnets may affect the accuracy or operation of the compass on vehicles so equipped.

The antenna cable should be as short as practical and routed away from the vehicle wiring when possible. Use only fully shielded coaxial cable.

Carefully match the antenna and cable to the radio to ensure a low Standing Wave Ratio (SWR).

Mobile radio equipment with output power greater than normal may require special precautions.

All installations should be checked for possible interference between the communications equipment and the vehicle's electronic systems.

DODGE SERVICE

STICK WITH THE SPECIALISTS®

Chrysler Group LLC

15D481-126-AC

Third Edition

Printed in U.S.A